12.6 A 0.65-to-1V-V_{DD} 10.5-to-11.85GHz Fractional-N Sampling PLL Achieving 71.47fs Integrated Jitter and <-60dBc Near-Integer Fractional Spur in 40nm CMOS

Yixi Li[1,2], Junjie Chen[1,2], Xinyu Shen[1], Jie Yang[3], Jian Liu[1,2], Nanjian Wu[1,2], Zhao Zhang[1,2], Liyuan Liu[1,2]

[1]Institute of Semiconductors, Chinese Academy of Sciences, Beijing, China, [2]University of Chinese Academy of Sciences, Beijing, China, [3]Westlake University, Hangzhou, China

Abstract

This paper presents a 0.65-to-1V, 10.5-to-11.85GHz wide-V_{DD}-range (WV) fractional-N sampling PLL. The QE-reduction WV SPD, high-linearity 2-stage DTC, and DCC-aided QE dithering method are proposed to address the issue of poor phase noise at low-V_{DD}, reliability at regular V_{DD}, nonlinearity, and convergence issues at small fractional FCWs. The 40nm prototype achieves 71.47fs jitter, –251.8dB FoM, and <–60dBc near-integer spur.

Dynamically varying supply voltage (V_{DD}) is attractive for digital-centric system on chips (SoC) to meet throughput and power-consumption requirements in different scenarios [1]. To meet the performance requirements of wireless transceivers in the SoCs, the phase-locked loop (PLL) with high spectral purity and high spectrum-utilization efficiency is crucial. Therefore, a fractional-N PLL (FN-PLL) that achieves low jitter and low spur across a wide dynamic voltage operating range (WV) is highly desirable. Several high-performance FN-PLLs operating at regular V_{DD} (≥0.9V) have been reported [2-12], including the digital-to-time-converter (DTC)-based and digital-to-analog-converter (DAC)-based architectures, which are widely adopted to eliminate quantization errors (QEs) generated by ΔΣ modulators (ΔΣMs) from time domain and voltage domain [Fig. 12.6.1(top-left)], respectively. However, at low V_{DD} (LV), their performances degrade significantly. The DTC suffers from degraded phase noise (PN) and stronger trade-off between PN and its linearity at LV [8-11], whereas the integral nonlinearity (INL) of the sampling phase detector (SPD) in the DAC-based FN-PLL degrades significantly due to the reduced voltage headroom at LV [12]. Moreover, to ensure a sufficient dynamic range for QE compensation, the gain of the SPD in the DAC-based approach gets decreased at LV, making it insufficient to suppress in-band phase noise (PN) of the FN-PLL. To overcome these issues, a LV low-jitter FN-PLL has been reported in [13] [Fig. 12.6.1(top-right)]. Yet, the deployment of voltage-booster-like circuits in its LV-C-DTC and LV-SPD introduces significant reliability concerns for regular V_{DD} operation. Furthermore, both LV-C-DTC and LV-SPD exhibit severe INL, necessitating a 16-coefficient hybrid-cascaded digital pre-distortion for INL compensation [13]. This induces convergence issue and significant hardware overhead.

To surmount these issues, we propose a 0.65-to-1V-V_{DD}, 10.5-to-11.85GHz wide-V_{DD}-range FN sampling PLL (WV-FN-SPLL) [Fig. 12.6.1(bottom)] achieving 71.47fs jitter, -251.8dB FoM, and <-60dBc near-integer fractional spur. The 1/2 QE-range reduction technique [10] is utilized to decrease the overall QE range, thereby enhancing the SPD gain and reducing the required delay range of the DTC for in-band PN reduction, particularly at LV. The QE is coarsely compensated by the QE-reduction wide-voltage SPD (QR-WV-SPD) and is further finely compensated by the high-linearity 2-stage DTC. It features: 1) a QR-WV-SPD suitable for the WV operation, proposed to reduce the DTC range with high linearity and high SPD gain, thereby improving the overall in-band PN; 2) high-linearity 2-stage DTC, devised to further release INL and noise folding of the main DTC (M-DTC) over a wide V_{DD} range; 3) our developed duty-cycle-corrector-aided (DCC-aided) QE dithering method to guarantee the reliable convergence of M-DTC INL calibration without requiring an additional dither-elimination DTC. As a result, the architecture achieves high linearity and low PN across a wide V_{DD} range.

The concept of the proposed high-linearity QE-range-reduction SPD is shown in Fig. 12.6.2(top). To balance the hardware complexity and the in-band PN contribution of the M-DTC, the proposed SPD performs coarse compensation for the 2-bit MSB QE. Therefore, the SPD operates with four turn-on times: $1T_{VCO}$, $0.75T_{VCO}$, $0.5T_{VCO}$, and $0.25T_{VCO}$. To achieve the same lock voltage (V_{Lock}) across all cases, the number of charge-current-source (I_U) cells is scaled accordingly as ×3, ×4, ×6, and ×12 while the capacitor (C) remains constant. Indeed, both I_U and C are voltage dependent (denoted as $I_U(V)$ and C(V)), especially at LV, which affects the actual V_{Lock} due to charging nonlinearity. Nevertheless, the concept remains valid since all four cases experience identical nonlinear effects along the same voltage trajectory, allowing V_{SPD} to lock at the same V_{Lock} without INL issues in each charging cycle. The proof is provided in Fig. 12.6.2(top-right). Ultimately, high-linearity QE coarse compensation is achieved across a wide V_{DD}, enabling low fractional spurs and suppressed noise folding while the M-DTC range is reduced to $0.25T_{VCO}$, alleviating the trade-off between DTC PN and INL.

The gain of prior SPD in a DAC-based FN-PLL [12] is constrained by the maximum QE range [Fig. 12.6.2(middle-left)], and worsens at LV, leading to inherently poor PN across wide V_{DD}. Unlike prior designs, the proposed SPD features four configurable gains that adapt to the QE magnitude, as illustrated in Fig. 12.6.2(middle-middle). The minimum gain (activated at QE=$1T_{VCO}$) matches that of prior SPDs, while the maximum gain (activated at QE=$0.25T_{VCO}$) offers a 4× improvement. The high-frequency variation of the SPD gain allows it to be approximated at a fixed value within the PLL bandwidth, ensuring stable dynamics. Moreover, the probability density function (PDF) of the MASH1-1 modulator 2-bit MSB enables the SPD to operate predominantly in a higher-gain mode, allowing for a higher average gain. Consequently, reduced in-band PN is achieved across a wide V_{DD} range. Under identical circuit topologies and at a regular V_{DD}, the equivalent input PN of both SPDs was simulated [Fig. 12.6.2(middle-right)]. The proposed SPD demonstrates a 5.4dB improvement in the in-band PN compared to the prior SPD (with a DAC).

An LV-SPD was proposed in [13], as shown in Fig. 12.6.2(bottom-left). However, its triple-stack PMOS charging path severely restricts voltage headroom, resulting in poor PN and INL. Although the negative-level-boosted inverter (NL-INV) [13] is used to alleviate the voltage headroom issue, the voltage-booster nature of the NL-INV suffers from reliability issues at regular V_{DD}, making such an LV-SPD unsuitable for WV operation. To address this, the WV-SPD is proposed, as described in Fig. 12.6.2(bottom-middle). In the design, complementary switches (SW_{GP}, SW_{GN}) and the switch (SW_D) cooperate to perform sampling. The sampling process consists of four phases: 1) Start of sampling: SW_H and SW_D are off, SW_{GP} is on, SW_{GN} is off. The PMOS gate is biased at V_{CG0}, initiating the PMOS current charging of the capacitor C_S. 2) End of sampling: SW_H and SW_D remain off; SW_{GP} turns off, and SW_{GN} turns on. The PMOS gate voltage switches to V_{DD}, immediately turning-off the charging current, thus holding the sampled voltage V_{SPD}. 3) Hold phase: SW_H turns on; all other switches remain unchanged. Voltage V_{SPD} is transferred to V_H. 4) Reset phase: SW_H turns off; SW_D turns on; SW_{GP} is on, SW_{GN} is off. The PMOS gate returns to V_{CG0}, stabilizing for the next sampling cycle. The proposed WV-SPD uses only one single PMOS current source in the charging path, significantly improving voltage headroom. This allows V_{SPD} to settle rapidly across a wide V_{DD} range, achieving high gain and low PN for WV operation. Furthermore, there is no voltage-booster-like circuit in our WV-SPD, ensuring reliable and robust WV operation. As simulated in Fig. 12.6.2(bottom-right), the INL of the WV-SPD at 0.65V V_{DD} is reduced by more that one order compared to the prior LV-SPD in [13].

A variable-slope DTC (VS-DTC) is a promising candidate for WV operation because it is simple and free of voltage-booster-like circuits. However, a severe trade-off between the figure of merit (FoM) and INL emerges at low V_{DD} [Fig. 12.6.3(top-left)]. A high-linearity 2-stage DTC architecture is proposed to break this trade-off [Fig. 12.6.3(top-middle)]. The convex INL characteristic of the M-DTC and its mechanisms were analyzed in [8]. A nonlinear-compensation DTC (NLC-DTC) is cascaded after the M-DTC to compensate for the M-DTC INL. The NLC-DTC control code $|DTC_{CODE}|$ is simply generated by applying an absolute-value operation to the M-DTC code. Furthermore, by adjusting the gain of the NLC-DTC, its dynamic delay T_3 can be configured to precisely cancel the M-DTC INL. Besides, a large-size NMOS in the M-DTC discharge path ensures the discharge resistance is dominated by R_D across a wide V_{DD} range, minimizing delay variation. Consequently, without employing any voltage booster, the proposed high-linearity 2-stage DTC simultaneously achieves low power, low PN, and low INL across a wide V_{DD} range. Simulations show the proposed high-linearity 2-stage DTC improves INL by ~60% with negligible PN degradation over a single M-DTC [Fig. 12.6.3(top-right)].

As shown in Fig. 12.6.3(bottom-left), since the 2-bit MSB of QE is compensated by the SPD, the dither in the M-DTC code is eliminated. Consequently, the DTC nonlinearity only introduces low-frequency disturbances in the VCO control voltage V_P at a small fractional frequency control word (FCW). This results in the failure to extract INL at small FCW. By introducing dither to the M-DTC code, the INL of the M-DTC induces sufficiently high-frequency disturbances in V_P, enabling the comparator loop to extract the INL information even at a small fractional FCW. Thus, the DCC-aided QE dithering method is proposed. Since the phase selection signal $SEL\text{-}CK_{FB}$, used in the 1/2 QE range reduction, exhibits high-frequency characteristics, we select the $SEL\text{-}CK_{FB}$ as the dither signal for the M-DTC code as illustrated in Fig. 12.6.3(bottom-middle). This enables the extraction of the M-DTC INL at a small fractional FCW, ensuring reliable convergence for the NLC-DTC calibration. Here, the functionality of the DCC-DTC is multiplexed: on one hand, it performs duty-cycle correction for 1/2 QE-range reduction; on the other hand, it cancels the M-DTC dither. The delays of each DTC-stage output are shown in Fig. 12.6.3(bottom-right). It is noteworthy that while dither techniques have been proposed in [7,14], they universally require an extra DTC for dither removal. Figure 12.6.4(left) shows the convergence transient simulation (FCW=$73+2^{-11}$), which demonstrate reliable convergence at a small fractional FCW.

2026 IEEE International Solid-State Circuits Conference (ISSCC) | 979-8-3315-8936-3/26/$31.00 ©2026 IEEE | DOI: 10.1109/ISSCC49663.2026.11408963

Authorized licensed use limited to: Westlake University. Downloaded on March 22,2026 at 14:39:34 UTC from IEEE Xplore. Restrictions apply.

Figure 12.6.4(right) plots the measured spectrum and PN at the fractional-N (FCW=73+2^{-11}) mode with a 150MHz F_{REF} at regular V_{DD}. The largest fractional spur is –64.85dBc and the integrated jitter from 1kHz to 100MHz is 54.96fs, respectively. Figure 12.6.5(left) plots the measured spectrum and PN at 0.65V V_{DD}. The largest fractional spur is –60.02dBc and the integrated jitter from 1kHz to 100MHz is 71.47fs, respectively. (In both modes, the power supply voltage for the VCO is 0.55V.) Thanks to the SPD gain boosting, wide-voltage techniques, and a low-noise DTC design, the WV-FN-PLL achieves <72fs jitter across a 0.65-to-1.0V V_{DD}. Benefiting from the high linearity of both the SPD and DTC, the worst fractional spur is below -60dBc as shown in Fig. 12.6.4(left). This WV-FN PLL simultaneously supports a wide V_{DD} range from low V_{DD} (0.65V) to regular V_{DD} (1.0V) at F_{OUT} above 10GHz while maintaining jitter below 72fs across the entire voltage range [Fig. 12.6.6]. The 40nm CMOS prototype achieves a competitive FoM_N across both low V_{DD} [15-19] and regular V_{DD}, particularly for over-10GHz F_{OUT} as shown in Fig. 12.6.7.

Acknowledgement:
This work was supported by the National Natural Science Foundation of China (No. 62174153 and 62222409). Corresponding author: Zhao Zhang (zhangzhao11@semi.ac.cn).

References:

[1] T. D. Burd et al., "A Dynamic Voltage Scaled Microprocessor System," *IEEE JSSC*, vol. 35, no. 11, pp. 1571-1580, Nov. 2000. https://doi.org/10.1109/4.881202
[2] H. Liu et al., "An Ultra-Low-Jitter Fast-Hopping Fractional-N PLL with LC DTC and Hybrid-Proportional Paths," *IEEE JSSC*, vol. 60, no. 3, pp. 785-798, Mar. 2025. https://doi.org/10.1109/JSSC.2024.3514870
[3] M. Chae et al., "34.1 A 65fs_{rms}-Jitter and -272dB-$FoM_{jitter,N}$ 10.1GHz Fractional-N Digital PLL with a Quantization-Error-Compensating BBPD and an Orthogonal-Polynomial LMS Calibration," *ISSCC*, pp. 554-556, Feb. 2025. https://doi.org/10.1109/ISSCC49661.2025.10904741
[4] Y. Shin et al., "10.5 A 76 fs_{rms}-Jitter and -65dBc-Fractional-Spur Fractional-N Sampling PLL Using a Nonlinearity-Replication Technique," *ISSCC*, pp. 196-198, Feb. 2024. https://doi.org/10.1109/ISSCC49657.2024.10454557
[5] J. Kim et al., "A 12.8-15.0-GHz Low-Jitter Fractional-N Subsampling PLL Using a Voltage-Domain Quantization-Error Cancellation," *IEEE JSSC*, vol. 59, no. 2, pp. 424-434, Feb. 2024. https://doi.org/10.1109/JSSC.2023.3297618
[6] Z. Gao et al., "A 2.6-to-4.1GHz Fractional-N Digital PLL Based on a Time-Mode Arithmetic Unit Achieving -249.4dB FoM and -59dBc Fractional Spurs," *ISSCC*, pp. 380-381, Feb. 2022. https://doi.org/10.1109/ISSCC42614.2022.9731561
[7] S. M. Dartizio et al., "A 76.7fs-Integrated-Jitter and -71.9dBc In-Band Fractional-Spur Bang-Bang Digital PLL Based on an Inverse-Constant Slope DTC and FCW Subtractive Dithering," *ISSCC*, pp. 78-79, Feb. 2023. https://doi.org/10.1109/ISSCC42615.2023.10067719
[8] M. Rossoni et al., "An 8.75GHz Fractional-N Digital PLL with a Reverse-Concavity Variable-Slope DTC Achieving 57.3fs_{rms} Integrated Jitter and -252.4dB FoM," *ISSCC*, pp. 188-189, Feb. 2024. https://doi.org/10.1109/ISSCC49657.2024.10454388
[9] D. Xu et al., "A 7GHz Digital PLL with Cascaded Fractional Divider and Pseudo-Differential DTC Achieving -62.1dBc Fractional Spur and 143.7fs Integrated Jitter," *ISSCC*, pp. 192-193, Feb. 2024. https://doi.org/10.1109/ISSCC49657.2024.10454284
[10] W. Wu et al., "A 16-22 GHz Fractional-N PLL in 8nm FinFET with 68 fs_{rms} Jitter," *IEEE RFIC*, pp. 111-114, June 2025. https://doi.org/10.1109/RFIC61188.2025.11082795
[11] Y. Liu et al., "A 37.5fs-rms Jitter and –254.1dB FoM Fractional-N Sampling PLL with Reference-Phase-Selection and Complementary-DTC Achieving 8× DTC Range Reduction and Zero DTC Delay Offset," *IEEE CICC*, pp. 1-3, Apr. 2025. https://doi.org/10.1109/CICC63670.2025.10983724
[12] G. Jin et al., "A Fractional-N Sampling PLL with a Merged Constant-Slope DTC and Sampling PD," *IEEE JSSC*, vol. 59, no. 8, pp. 2407-2417, Aug. 2024. https://doi.org/10.1109/JSSC.2024.3358564
[13] X. Shen et al., "A 0.65V-V_{DD} 10.4-to-11.8GHz Fractional-N Sampling PLL Achieving 73.8fs_{rms} Jitter, -271.5dB FoM_N, and -61dBc in-Band Fractional Spur in 40nm CMOS," *ISSCC*, pp. 338-339, Feb. 2025. https://doi.org/10.1109/ISSCC49661.2025.10904612
[14] Z. Ye et al., "A 6.8-to-14.4GHz Octave-Tuning Fractional-N Charge-Pump PLL with Slide-Dithering-Based Background DTC Nonlinearity Calibration for Near-Integer Fractional Spur Mitigation Achieving 78fs RMS Jitter and -258.6dB FoM_T," *IEEE CICC*, pp. 1-2, Apr. 2024. https://doi.org/10.1109/CICC60959.2024.10529020
[15] L. Feng et al., "A 0.45V 0.72mW 2.4GHz Bias-Current-Free Fractional-N Hybrid PLL Using a Voltage-Mode Phase Interpolator in 28nm CMOS," *ISSCC*, pp. 266-268, Feb. 2024. https://doi.org/10.1109/ISSCC49657.2024.10454404
[16] H. Liu et al., "A Sub-mW Fractional-N ADPLL with FOM of -246 dB for IoT Applications," *IEEE JSSC*, vol. 53, no. 12, pp. 3540-3552, Dec. 2018. https://doi.org/10.1109/JSSC.2018.2878836
[17] H. R. Kooshkaki and P. P. Mercier, "A 0.55mW Fractional-N PLL with a DC-DC Powered Class-D VCO Achieving Better than -66dBc Fractional and Reference Spurs for NB-IoT," *IEEE CICC*, pp. 1-4, Apr. 2020. https://doi.org/10.1109/CICC48029.2020.9075944
[18] C.-C. Li et al., "A Compact Transformer-Based Fractional-N ADPLL in 10-nm FinFET CMOS," *IEEE TCAS-I*, vol. 68, no. 5, pp. 3540-3552, May 2018. https://doi.org/10.1109/TCSI.2021.3059484
[19] H. Liu et al., "A 265-mW Fractional-N Digital PLL with Seamless Automatic Switching Sub-Sampling/Sampling Feedback Path and Duty-Cycled Frequency-Locked Loop in 65-nm CMOS," *IEEE JSSC*, vol. 54, no. 12, pp. 3478-3492, Dec. 2019. https://doi.org/10.1109/JSSC.2019.2936967

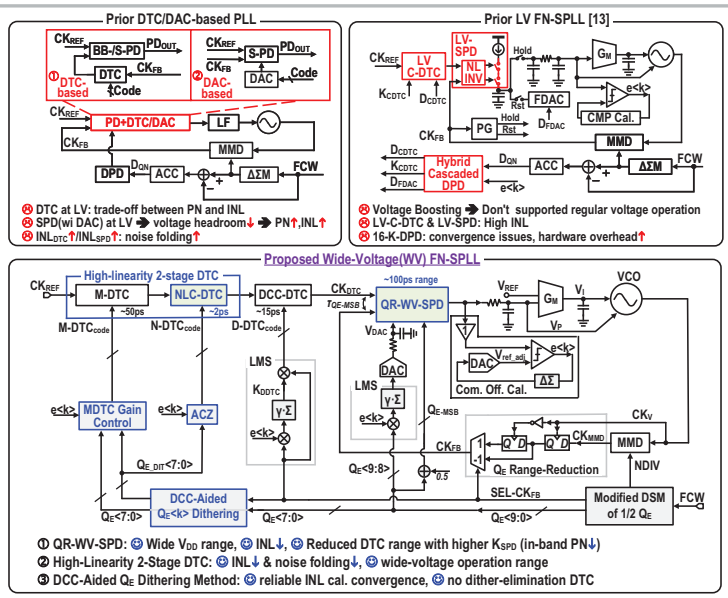

Figure 12.6.1: (top) Review of prior regular-V_{DD} and low-V_{DD} PLLs; (bottom) the overall architecture of the wide-voltage fractional-N sampling PLL.

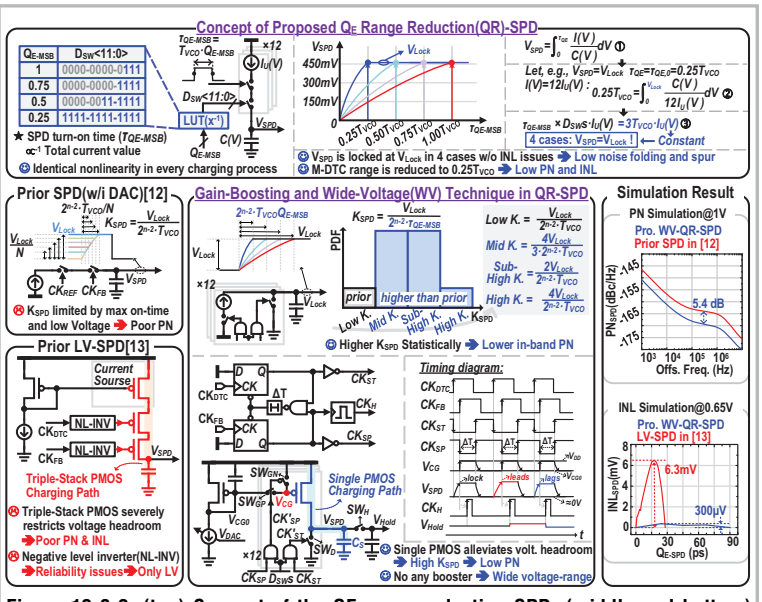

Figure 12.6.2: (top) Concept of the QE-range-reduction SPD; (middle and bottom) comparison between prior SPDs and the proposed WV-SPD.

Authorized licensed use limited to: Westlake University. Downloaded on March 22,2026 at 14:39:34 UTC from IEEE Xplore. Restrictions apply.

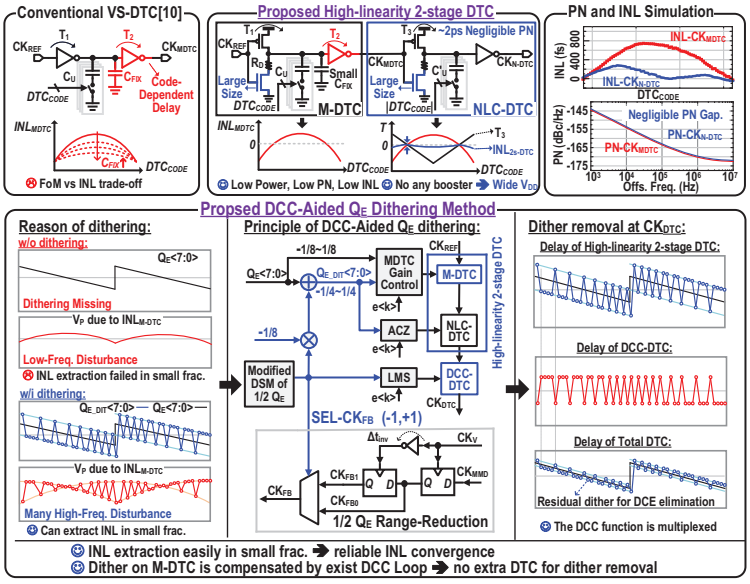

Figure 12.6.3: (top-left) Review of prior DTCs, and the proposed high-linearity 2-stage-DTC (top-right); the proposed DCC-aided QE dithering method (bottom).

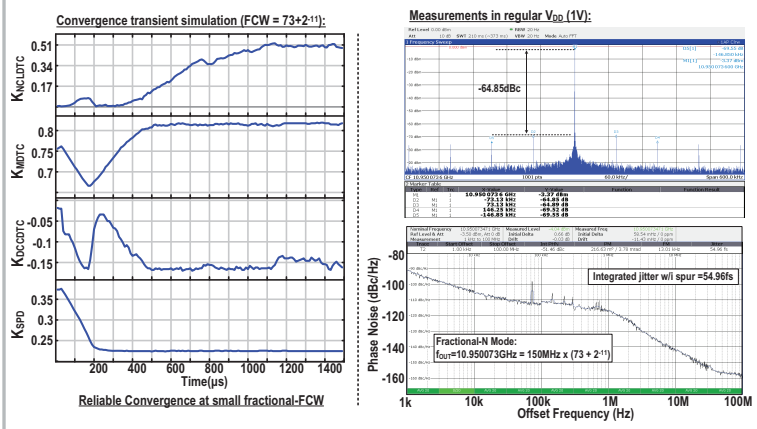

Figure 12.6.4: Convergence transient simulation (left); measured spectrum and rms jitter at a regular V_{DD}.

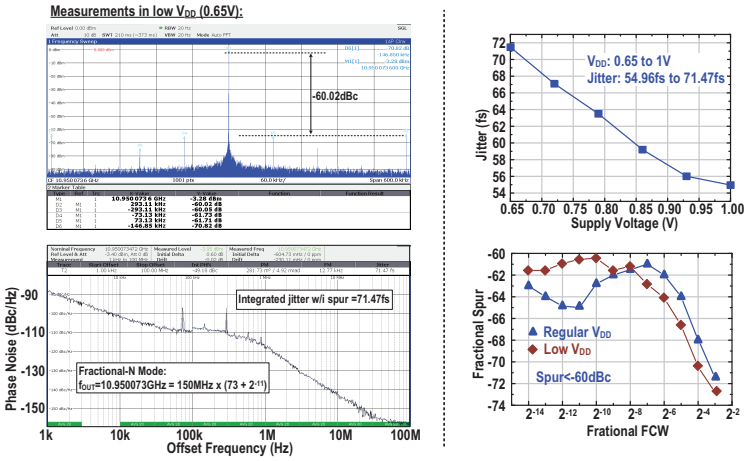

Figure 12.6.5: (left) Measured spectrum and rms jitter at a low V_{DD}; (top-right) measured rms jitter versus V_{DD}; measured fractional spur versus fractional FCW (bottom-right).

	WV-FN-PLL		Low voltage fractional-N PLLs			Regular voltage fractional-N PLLs			
	This Work		ISSCC'25[13] X. Shen	ISSCC'24[15] L. Feng	JSSC'18[16] H. Liu	JSSC'25 [2] H. Liu	ISSCC'25 [3] M. Chae	ISSCC'24 [4] Y. Shin	JSSC'24 [5] J. Kim
Architecture	SPLL		SPLL	Hybrid PLL	DPLL	Hybrid PLL	BBPLL	Digital SPLL	Digital-SSPLL
Key Technology	QR-WV-SPD & NLC-DTC		C-DTC&F-DAC with HC-DPD	VPI	CS-DTC + 4-bit TDC	LC-DTC	QEC-BBPD	DAC with NL Replication	DAC with SCF DPD
CMOS (nm)	40		40	28	65	28	40	40	65
Supply Voltage	0.65	1	0.65	0.55	0.8	N/A	0.9	1	1.2
F_{OUT} (GHz)	10.950073 (10.5 to 11.85)		10.506758 (10.4 to 11.8)	2.4 (2.21 to 2.57)	2.44 (2.0 to 2.8)	11.2500045 (11.1 to 14.8)	10.100012 (10.0 to 11.5)	10.500293 (10.4 to 11.8)	14.00039 (12.8 to 15.0)
F_{REF}(MHz)	150		100.0625	50	26	250	100	150	100
Ref. spur (dBc)	-67.1	-64	-72.9	-66	-72	-65.3	-67.4	-67	N/A
Integrated Jitter (fs)	71.47	54.96	73.8$	470.2$	530$	61.7	65	76	104
In-Band Frac. Spur (dBc)	-60.02	-64.85	-61	-63	-56	-62.4	-63	-65	-58
Power(mW)	11	15.5	13.7	0.85	0.98	34	14.4	15.3	7.3
*FoM(dB)	-252.5	-253.3	-251.3	-247.3	-246	-250.7	-252.2	-250.5	-251
**FoM_N(dB)	-271.1	-271.9	-271.5	-264.1	-265.7	-267.2	-272.2	-269.2	-271
Core Area (mm^2)	0.378		0.27	0.24	0.23	0.21	0.12	0.17	0.21

*FoM = $20\log(\sigma_{rms})+10\log(P_{DC}/1mW)$, FoM_N = FOM-10log(N), the lower, the better

$Integrated jitter without spur

Figure 12.6.6: Performance summary and comparison.

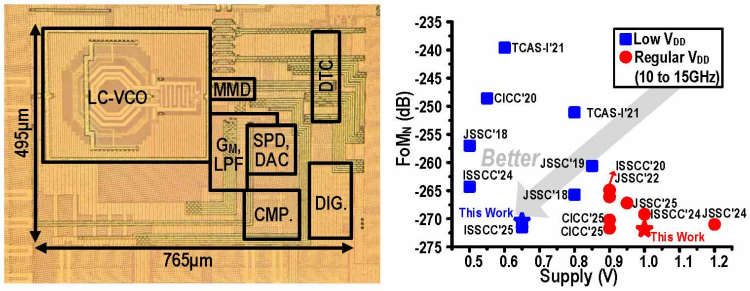

Figure 12.6.7: Die micrograph (left) and performance comparison with prior low-V_{DD} and regular-V_{DD} (over 10GHz) fractional-N PLLs (right).

Authorized licensed use limited to: Westlake University. Downloaded on March 22,2026 at 14:39:34 UTC from IEEE Xplore. Restrictions apply.

 979-8-3315-8936-3/26/$31.00 ©2026 IEEE