36.6 A Sparsity-Aware Neural Interface with CIM-Based Predictive Focused Sampling for Hotspot Spike Tracking

Hui Wu*[1], Fengshi Tian*[2], Jinbo Chen[1], Zhipeng Liao[1], Hongyong Zhang[1], Xing Liu[1], Wenjun Zou[1], Sirui Cheng[1], Zhao Zhang[3], Jianlong Xu[4], Chi-Ying Tsui[2], Kwang-Ting Tim Cheng[2], Jie Yang[1], Mohamad Sawan[1]

[1]Westlake University, Hangzhou, China, [2]Hong Kong University of Science and Technology, Hong Kong, China
[3]Institute of Semiconductors, Chinese Academy of Sciences, Beijing, China, [4]Soochow University, Suzhou, China
*Equally Credited Authors (ECAs)

Abstract

This 1024-electrode neural interface solves the power, area, and bandwidth bottleneck by combining low-power panoramic scanning for hotspot prediction with high-fidelity spike tracking on active sites. The dynamic allocation is guided by a real-time compute-in-memory (CIM) engine, providing a 16× resolution boost (10kHz) and 0.0011mm²/ch efficiency in 40nm CMOS. The design maximizes spike density to lower power and silicon area.

The pursuit of high-density neural interfaces is fundamentally limited by strict implant power, area, and bandwidth budgets, a constraint exacerbated by the disparity between uniformly distributed hardware and the sparse, non-uniform nature of neural activity [1-6]. Conventional dedicated-per-channel readouts scale poorly in power and area [7-9], while uniform multiplexed scanning wastes critical resources on non-spike signals [10-14]. Some approaches attempt to mitigate this by sub-sampling large electrode arrays with a limited set of readout channels [15-21]. However, these methods often rely on static or slowly adapting techniques such as manual electrode selection [15,16], indirect activity indicators [17,18], or offline training to identify active regions [19,20]. These solutions still face challenges, including frequent recalibration due to chronic electrode drift. While the event-based spatially zooming architecture [22] offers exceptional power efficiency, its scalability is limited by a large silicon footprint. Moreover, the inherently event-driven operation may fail to capture low-amplitude, densely clustered, or rapidly successive spikes, thereby compromising the waveform fidelity essential for reliable spike sorting.

To address these challenges, we present a 1024-electrode sparsity-aware neural interface that employs a predictive focused sampling scheme to optimize resource allocation. First, the architecture introduces a dual-mode scanning strategy, combining low-power 8b panoramic monitoring with high-fidelity 11b spike tracking. This provides a 16× temporal resolution boost (10kHz) for active hotspots and achieves a >5.33× data compression, substantially alleviating the wireless transmission burden. Second, this intelligent allocation is enabled by a real-time hotspot predictor, implemented with an energy-efficient compute-in-memory (CIM) core. This ensures robust tracking of dynamic neural patterns and provides inherent resilience to chronic electrode drift. Finally, by amortizing a minimal, time-shared front-end across the 32×32 array, the design is realized in a silicon area of 0.22mm², achieving a high integration density for kilo-electrode recording implants.

Figure 36.6.1 illustrates the architecture of the proposed focused-sampling neural interface (FSNI). The system consists of two dedicated time-division multiplexed analog front-ends (AFEs), each acquiring signals from a 16×32 sub-array to cover the 1024 electrodes. A Column Scanner sequentially drives the array, allowing a 16-to-1 multiplexer within each half to select a subgroup of electrodes for readout by low-noise transconductance amplifiers (TCs). The amplified signals are then integrated and sampled by a track-and-hold (T/H) stage and digitized by a single, power-efficient successive approximation register (SAR) ADC, which dynamically switches between 8b and 11b resolution based on the scheduled slot type.

The intelligence of this sparsity-aware strategy resides in the digital control core. In its default Baseline Scan Slot (BSS) mode, panoramic 8b data is captured at 625Hz and streamed into a Frame Buffer for real-time processing by a Hotspot Predictor. Upon detection of spike-like activity, the Slot Scheduler commands the front-end to immediately up-sample the identified hotspot by activating available Spike-Focused Slots (SFS). The architecture provides three SFSs per column-scan, enabling the simultaneous tracking of up to three distinct hotspots within each 16-row segment, corresponding to a system-wide maximum of 192 simultaneously active SFS channels across the 32 columns. This capacity was deliberately chosen to match neural firing densities and ensure efficient resource allocation [23,24]. During an SFS, the ADC switches to its high-precision 11b mode, capturing the full spike waveform at an effective sampling rate of 10kHz. This 16× enhancement in temporal resolution is a direct result of the column-based scanning, which allows a column to be revisited 16× more frequently than a full-frame scan. To ensure long-term signal fidelity, a Local Offset Average block provides a crucial feedback loop. It mitigates electrode DC offset by periodically averaging non-spike signals across the array to recalibrate and feed corrections back to the analog chain via IDACs.

Figure 36.6.2 details the circuit implementation of the time-division multiplexed (TDM) analog front-end (AFE). The signal chain begins with a transconductance amplifier (TC) that employs a flipped-voltage-follower (FVF) structure to achieve low output impedance, which is critical for current-mode DC offset feedback. A pair of Gm-boosting OTAs (A1) eliminates the level shift of conventional source followers while stabilizing the common-mode voltage with sufficient headroom. The TC output current is amplified by a 4× current mirror and integrated onto the track-and-hold (T/H) capacitor during the sampling phase. In the subsequent hold phase, the T/H amplifier first executes a charge-transfer operation, actively moving the stored charge to the hold capacitor to provide additional gain and isolating the electrode from the ADC input; a wide-swing OTA buffer then ensures accurate holding and rapid settling for quantization. Two AFEs share one T/H and a single SAR ADC, improving hardware efficiency under multiplexed operation. The TC–T/H pair inherently performs a windowed integration, simultaneously acting as a charge-domain gain stage and a first-order sinc filter that amplifies the signal, suppresses in-band thermal noise, and attenuates out-of-band noise to prevent aliasing. Programmable gain modes of 1×/2×/4× extend the ADC's dynamic range to resolve both low-amplitude spikes and large baseline shifts, while the ADC itself supports dual-resolution operation: an 8b mode consuming 6.8μW for panoramic baseline scans and an 11b mode consuming 51.2μW for spike-focused slots, enabling power-proportional precision scaling. To further reduce electrode loading in high-speed multiplexing (SFS mode), a ping-pong reservoir (PPR) pre-charges a capacitor one slot ahead of sampling, then transfers the charge to the input capacitor followed by a brief electrode correction, effectively boosting the equivalent input impedance to 84MΩ and relieving instantaneous electrode current stress. Finally, a digital offset-cancellation loop averages non-spike samples and injects compensating currents via an IDAC at the TC output, suppressing quasi-static electrode offsets and keeping the input baseline within the ADC's linear range.

Figure 36.6.3 illustrates the digital core, which leverages a 32×32×8b multi-mode compute-in-memory (MM-CIM) engine to perform power-efficient hotspot prediction. To overcome the memory-wall bottleneck that dominates the energy consumption of conventional digital processors, the design embeds the core computational task—local average calculation for adaptive thresholding—directly within the memory array. This is achieved through a hierarchical, massively parallel architecture detailed in the MM-CIM Engine Organization diagram. Each of the 32 columns integrates a dedicated 4:2 compressor adder tree, enabling simultaneous in-situ partial sum (PSUM) accumulation of analog bitline summations. The column-level PSUMs from a selected 16×16 window are then aggregated by a second-level adder tree. This in-situ computation entirely obviates the need for 256 costly memory read cycles, which is the primary source of the 7.7× reduction in core computation energy. The hotspot prediction operates as a four-phase, single-pass pipeline for real-time analysis. First, an 8b data frame is written into the CIM array (Phase 1). Next, the CIM engine computes the window average in-situ, generating an adaptive threshold (Phase 2). This threshold is then used to binarize the pixel data, creating an activity mask (Phase 3). Finally, a dedicated hardware block calculates the centroid of the activated region, extracting its precise coordinates to close the event-driven feedback loop (Phase 4). This architecture improves computational density by 1.5× and enables the low-latency analysis essential for predictive focused sampling.

Figure 36.6.4 summarizes the measured performance of the FSNI. Compared with a non-CIM baseline, the design reduces energy by 87%, area by 40%, and memory by 20%, highlighting the benefit of in-memory processing. Benchmarking with an open-source dataset shows that the focused-sampling scheme preserves spike sorting accuracy comparable to raw full-rate data, confirming waveform integrity [25]. Measured spectra demonstrate that the dual-mode SAR ADC achieves 41.39dB SNDR (6.58b ENOB) in BSS mode at 625Hz and improves to 48.89dB SNDR (7.83b ENOB) in SFS mode at 10kHz, enabling power-scalable precision. The input-referred noise is 8.7μVrms over the 300Hz-to-10kHz AP band with a flat-band density of 40nV/√Hz. Input impedance measurements show a boost from 300kΩ in BSS mode to 84MΩ in SFS mode using the ping-pong reservoir, corresponding to a 280× improvement that minimizes electrode loading during high-speed sampling. These results validate the system's ability to balance panoramic monitoring with high-resolution spike capture while maintaining low noise and high fidelity.

The system was further validated through in-vitro experiments using stem-cell-derived neuronal cultures interfaced with the 32×32 active electrode array. As shown in Figure 36.6.5, the sparsity-aware neural interface was integrated with a custom readout platform, where an external MCU provided electrode scanning and data streaming. The electrical characteristics of the active electrodes, including transistor I–V behavior and frequency-dependent impedance, confirm stable operation and sufficient bandwidth for neuronal activity recording. Spatial activity maps across successive frames demonstrate that the digital hotspot predictor reliably localizes spike-rich regions, enabling adaptive activation of spike-focused slots. Corresponding neural traces show that the system dynamically switches from low-rate panoramic baseline monitoring (BSS mode, 625Hz) to high-rate,

2026 IEEE International Solid-State Circuits Conference (ISSCC) | 979-8-3315-8936-3/26/$31.00 ©2026 IEEE | DOI: 10.1109/ISSCC49663.2026.11409079

Authorized licensed use limited to: Westlake University. Downloaded on March 22,2026 at 08:37:36 UTC from IEEE Xplore. Restrictions apply.

high-SNR capture of localized spikes (SFS mode, 10kHz), thereby validating the predictive focused-sampling strategy in a biologically relevant environment.

Figure 36.6.6 compares the FSNI with prior neural implant systems, and Fig. 36.6.7 presents chip micrographs with area and power breakdowns. Our system demonstrates a 1024-electrode sparsity-aware neural interface in 40nm CMOS that achieves a total chip area of 0.22mm². By combining CIM-based predictive focused sampling with a power-scalable TDM+SAR architecture, this work achieves both high channel density and power-efficient operation for kilo-electrode recording implants.

Acknowledgment:
This work was supported by STI2030-Major Projects (No. 2022ZD0208805), "Pioneer" and "Leading Goose" Research and Development Program of Zhejiang (No. 2024C03002), National Natural Science Foundation of China (No. W2431058), and was partially conducted by ACCESS – AI Chip Center for Emerging Smart Systems, supported by the InnoHK initiative of the Innovation and Technology Commission of the Hong Kong Special Administrative Region Government. Work was conducted through the Integrated-on-Chips Brain-Computer Interfaces Zhejiang Engineering Research Center, Hangzhou, China. The corresponding authors are Jie Yang and Mohamad Sawan (yangjie@westlake.edu.cn, sawan@westlake.edu.cn).

References:

[1] R. Muller et al., "24.1 A miniaturized 64-channel 225μW wireless electrocorticographic neural sensor," *ISSCC*, Feb. 2014, pp. 412–413. https://doi.org/10.1109/ISSCC.2014.6757492
[2] D. Kleinfeld et al., "Can One Concurrently Record Electrical Spikes from Every Neuron in a Mammalian Brain?," *Neuron*, vol. 103, no. 6, pp. 1005-1015, Sept. 2019. https://doi.org/10.1016/j.neuron.2019.08.011
[3] C. Yang et al., "Neural Dielet 2.0: A 128-Channel 2mm×2mm Battery-Free Neural Dielet Merging Simultaneous Multi-Channel Transmission Through Multi-Carrier Orthogonal Backscatter," in *IEEE Transactions on Biomedical Circuits and Systems*, vol. 19, no. 1, pp. 226-237, Feb. 2025. https://doi.org/10.1109/TBCAS.2024.3416728
[4] Tsai, D. et al., A very large-scale microelectrode array for cellular-resolution electrophysiology. *Nat Commun* 8, 1802 (2017). https://doi.org/10.1038/s41467-017-02009-x
[5] M. Shoaran et al., "Intelligent Neural Interfaces: An Emerging Era in Neurotechnology," *IEEE Custom Integrated Circuits Conference*, 2024, pp. 1-7. https://doi.org/10.1109/CICC60959.2024.10529099
[6] Trautmann et al., Large-scale high-density brain-wide neural recording in nonhuman primates. *Nat Neurosci* 28, 1562–1575 (2025). https://doi.org/10.1038/s41593-025-01976-5
[7] X. Yang et al., "A Highly-Integrated 1536-Channel Quad-Shank Monolithic Neural Probe in 55nm CMOS for Full-Band Raw-Signal Recording," 2024 *IEEE Symposium on VLSI Technology and Circuits*, 2024, https://doi.org/10.1109/VLSITechnologyandCir46783.2024.10631430
[8] M. Jang et al., "A 1024-Channel 268-nW/Pixel 36×36 μm²/Channel Data-Compressive Neural Recording IC for High-Bandwidth Brain–Computer Interfaces," in *IEEE Journal of Solid-State Circuits*, vol. 59, no. 4, pp. 1123-1136, April 2024. https://doi.org/10.1109/JSSC.2023.3344798
[9] D. -Y. Yoon et al., "A 1024-Channel Simultaneous Recording Neural SoC with Stimulation and Real-Time Spike Detection," *Symposium on VLSI Circuits*, 2021 https://doi.org/10.23919/VLSICircuits52068.2021.9492480
[10] X. Huang et al., "A 256-Channel Actively-Multiplexed μECoG Implant with Column-Parallel Incremental ΔΣ ADCs Employing Bulk-DACs in 22-nm FDSOI Technology," *ISSCC*, 2021, pp. 200-202. https://doi.org/10.1109/ISSCC42614.2022.9731630
[11] M. A. Shaeri et al., "MiBMI: A 192/512-Channel 2.46mm² Miniaturized Brain-Machine Interface Chipset Enabling 31-Class Brain-to-Text Conversion Through Distinctive Neural Codes," ISSCC, 2024, pp. 546-547. https://doi.org/10.1109/ISSCC49657.2024.10454533
[12] J. Chen et al., "A Neuron-Inspired 0.0032mm²–1.38μW/Ch Wireless Implantable Neural Interface with Direct Multiplexing Front-End and Event-Driven Spike Detection and Transmission," *IEEE Custom Integrated Circuits Conference*, Apr. 2024, https://doi.org/10.1109/CICC60959.2024.10529097
[13] N. S. K. Fathy et al., "A 0.00179 mm²/Ch Chopper-Stabilized TDMA Neural Recording System With Dynamic EOV Cancellation and Predictive Mixed-Signal Impedance Boosting," in *IEEE Transactions on Biomedical Circuits and Systems*, vol. 18, no. 4, pp. 908-922, Aug. 2024. https://doi.org/10.1109/TBCAS.2024.3366649
[14] W. Choi et al., "A 1,024-Channel, 64-Interconnect, Capacitive Neural Interface Using a Cross-Coupled Microelectrode Array and 2-Dimensional Code-Division Multiplexing," *IEEE Symposium on VLSI Technology and Circuits*, 2023, https://doi.org/10.23919/VLSITechnologyandCir57934.2023.10185425
[15] N. Zeng et al., "A Wireless, Mechanically Flexible, 25μm-Thick, 65,536-Channel Subdural Surface Recording and Stimulating Microelectrode Array with Integrated Antennas," *IEEE Symposium on VLSI Technology and Circuits*, 2023, https://doi.org/10.23919/VLSITechnologyandCir57934.2023.10185321
[16] C. M. Lopez et al., "A 16384-electrode 1024-channel multimodal CMOS MEA for high-throughput intracellular action potential measurements and impedance spectroscopy in drug-screening applications," *ISSCC*, 2018, pp. 464-465. https://doi.org/10.1109/ISSCC.2018.8310385
[17] H. -S. Lee et al., "A Multi-Channel Neural Recording System With Neural Spike Scan and Adaptive Electrode Selection for High-Density Neural Interface," in *IEEE Transactions on Circuits and Systems I: Regular Papers*, vol. 70, no. 7, pp. 2844-2857, July 2023. https://doi.org/10.1109/TCSI.2023.3268686
[18] Cartiglia et al., A 4096 channel event-based multielectrode array with asynchronous outputs compatible with neuromorphic processors. *Nat Commun* 15, 7163 (2024). https://doi.org/10.1038/s41467-024-50783-2
[19] Saboo et al., Unsupervised machine-learning classification of electrophysiologically active electrodes during human cognitive task performance. *Sci Rep* 9, 17390 (2019). https://doi.org/10.1038/s41598-019-53925-5
[20] J. Choi et al., "Optimal Adaptive Electrode Selection to Maximize Simultaneously Recorded Neuron Yield," *Advances in Neural Information Processing Systems*, Oct. 2020. https://dl.acm.org/doi/10.5555/3495724.3496241
[21] J. -H. Cha et al., "A Reconfigurable Sub-Array Multiplexing Microelectrode Array System With 24,320 Electrodes and 380 Readout Channels for Investigating Neural Communication," *ISSCC*, 2022, pp. 342-343. https://doi.org/10.1109/ISSCC42614.2022.9731590
[22] J. Xu et al., "Event-Based Spatially Zooming Neural Interface IC with 10nW/Input Reconfigurable-Inverter Fabric and Input-Adaptive Quantization," *ISSCC*, 2025, pp. 274-275. https://doi.org/10.1109/ISSCC49661.2025.10904733
[23] Steinmetz et al., Distributed coding of choice, action and engagement across the mouse brain. *Nature* 576, 266–273 (2019). https://doi.org/10.1038/s41586-019-1787-x
[24] Pachitariu et al., Spike sorting with Kilosort4. *Nat Methods* 21, 914–921 (2024). https://doi.org/10.1038/s41592-024-02232-7
[25] Brochier et al., Massively parallel recordings in macaque motor cortex during an instructed delayed reach-to-grasp task. *Sci Data* 5, 180055 (2018). https://doi.org/10.1038/sdata.2018.55
[26] X. Huang et al., "A 3072-Channel Neural Readout IC with Multiplexed Two-Step Incremental-SAR Conversion and Bulk-DAC-Based EDO Compensation in 22nm FDSOI," *IEEE Symposium on VLSI Technology and Circuits,* 2024, https://doi.org/10.1109/VLSITechnologyandCir46783.2024.10631524

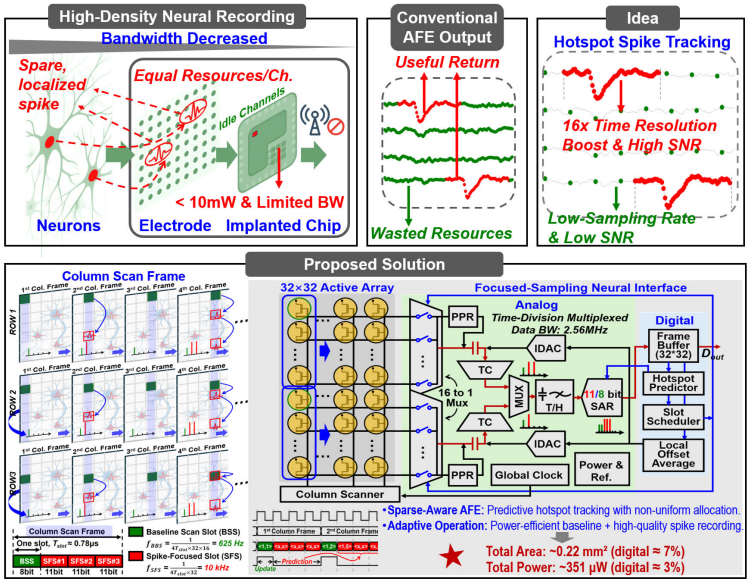

Figure 36.6.1: Conceptual overview and architecture of the proposed sparse-aware neural interface with 16× temporal resolution boost for hotspot spike tracking.

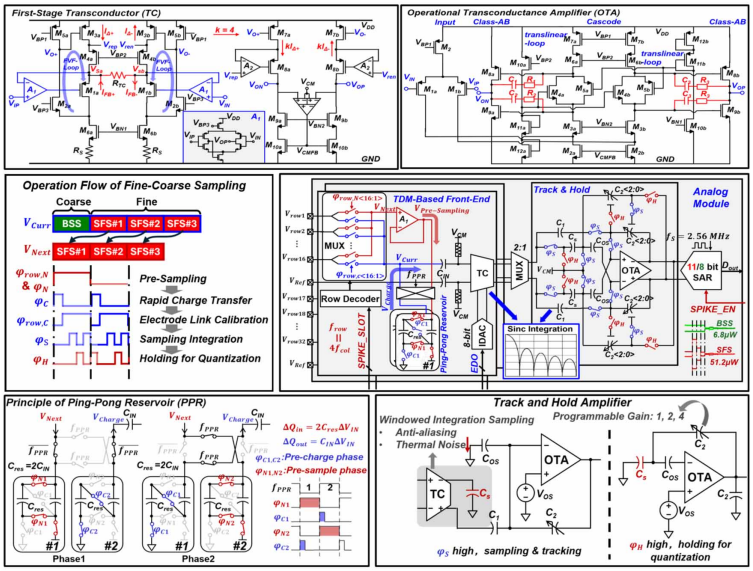

Figure 36.6.2: Key circuits enabling the focused-sampling scheme, including the FVF-based TC, Class-AB OTA, Ping-Pong Reservoir, and programmable-gain T/H.

Authorized licensed use limited to: Westlake University. Downloaded on March 22,2026 at 08:37:36 UTC from IEEE Xplore. Restrictions apply.

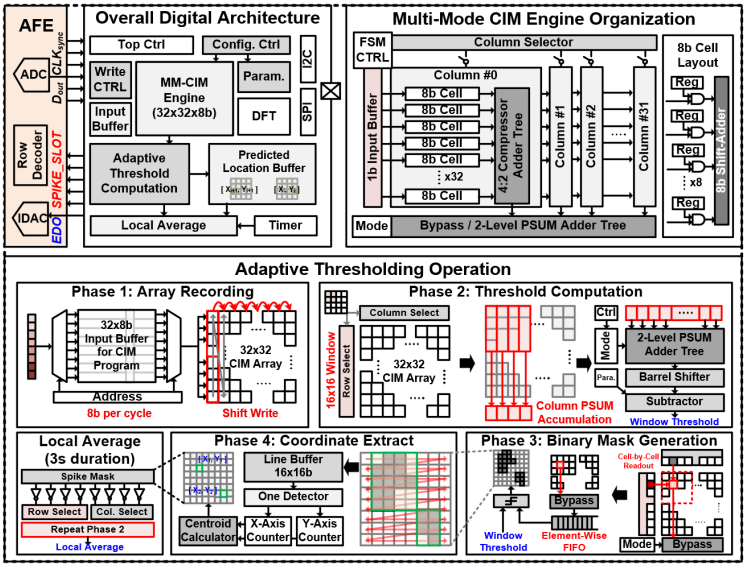

Figure 36.6.3: Digital core featuring a multi-mode Compute-in-Memory (CIM) engine that executes a four-phase adaptive thresholding algorithm to predict spike hotspots.

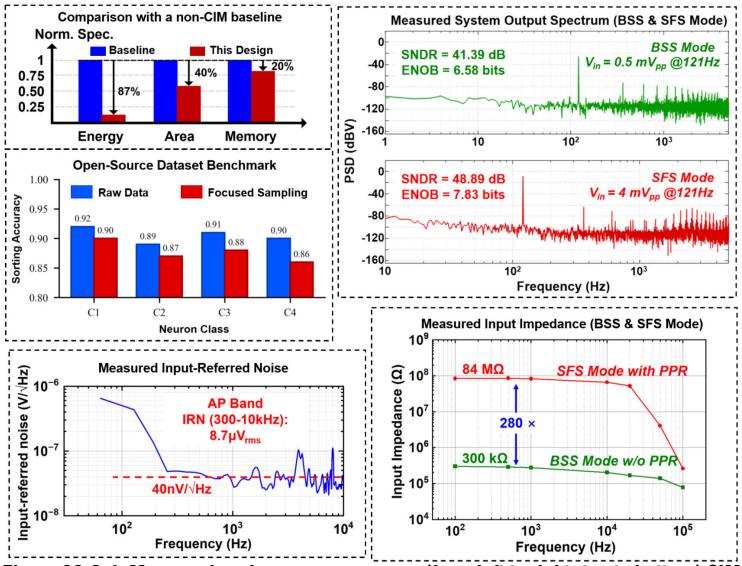

Figure 36.6.4: Measured performance summary: (from left to right, top to bottom) CIM-core comparison, spike sorting benchmark, input-referred noise, system output spectrum, and input impedance.

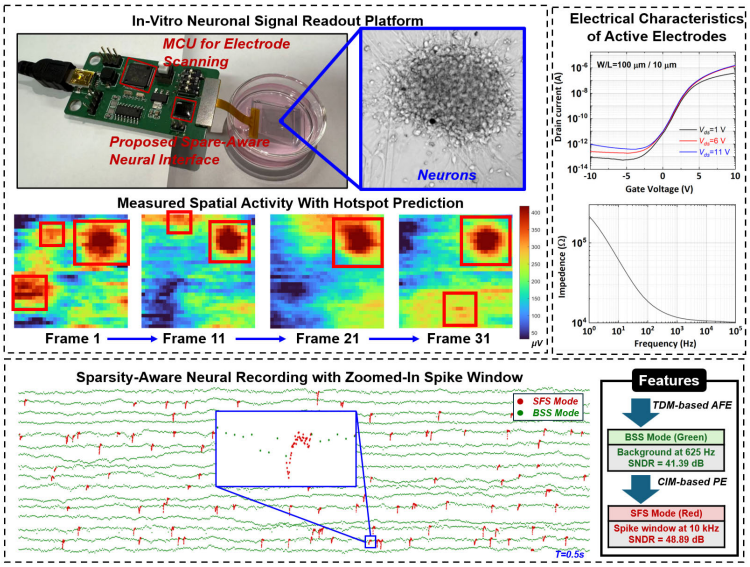

Figure 36.6.5: In-vitro system demonstration showing successful digital hotspot prediction and dual-mode (BSS/SFS) spike capture from a live neuronal culture.

	THIS WORK	ISSCC'25 Xu [22]	VLSI'24 Huang [26]	CICC'24 Chen [12]	NC'24 Cartiglia [18]	TCASI'23 Lee [17]	ISSCC'22 Cha [21]
TECHNOLOGY [nm]	**40**	65	22	40	180	180	110
SUPPLY VOLTAGE [V]	**1.2**	0.7 – 3.3	0.5/0.8	1.2/0.6	1.8	1.8	-
ARCHITECTURE	**TDM+SAR**	INV-based AFE	Two-step I-SAR	TDM+ASC	LC-ADC	AMP+SAR	TDM+SAR
RECORDING MODALITY	**SPIKEs**	SPIKEs	LFPs & SPIKEs	SPIKEs	SPIKEs	LFPs & SPIKEs	SPIKEs
ELECTRODE TYPE	**Active**	Passive	Active	Active	Passive	Passive	Passive
ELECTRODE SELECTION	**Hotspot Prediction**	Spatial Zooming	No	No	No	MUA[f] Scan	Random
ELEC. # / MAX CH. #	**1024/192**	64/64	3072/3072	32/32	4096/4096	32/12	24320/380
ELEC.-to-REC. RATIO	**18.75%**	100%	100%	100%	100%	37.5%	1.56%
BANDWIDTH / CH. [kHZ]	**10**	20	7.5	5.2	10	14	20/10/5
ENOB [BITS]	**7.83[a]**	7.68	-	-	6[e]	12	-
SNDR [dB]	**48.89[a]**	48	< 49.6	< 47.2	37.2	-	-
PWR / CHANNEL [μW]	**1.83**	0.004[c]	0.438	1.38	0.8	10.7	80.79
AREA / CHANNEL [mm²]	**0.0011**	0.04[d]	0.0004	0.0032	0.0023	0.24	0.02
IRN [μV_{rms}]	**8.7 @300-10kHz**	7.3 @1k-20kHz	6.38 @1-7.5kHz	2.9 @1-1kHz	19.04 @500-3kHz	3.41 @10-10kHz	5.4 @300-10kHz
INPUT IMPEDANCE (GΩ)	**0.084[b]**	>1 @2kHz	-	-	-	-	-

-: Not reported
[a] Measured from the FFT of the system in SFS mode.
[b] Input impedance measured in spike-focused slot (SFS) mode.
[c] For an average spike rate of 25 spikes/second and 1/32 spatial spike sparsity.
[d] Estimated from chip micrograph.
[e] Estimated
[f] MUA: Multi-unit activity

Figure 36.6.6: Performance summary and comparison with state-of-the-art works.

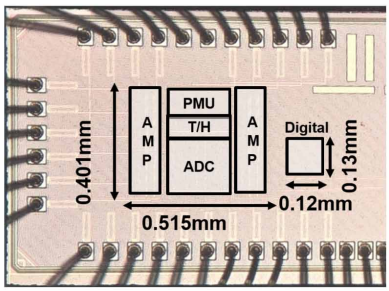

Technology
40 nm
Chip Area (Area/Channel)
0.22 mm² (0.0011 mm²)
Total Power (Power/Channel)
351.44 μW (1.83 μW)
Maximum Data rate (All SFS Enable)
26.24 Mbits/s

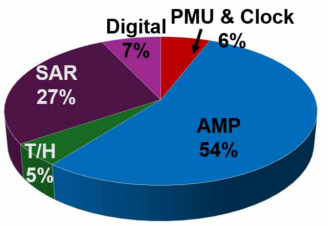

Area = 0.22 mm²

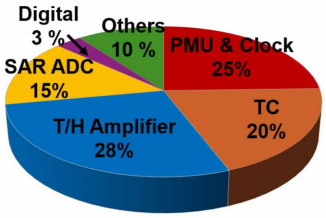

Power = 351.44 μW

Figure 36.6.7: Die micrograph, performance summary, and breakdown of the 1024-electrode neural interface in 40nm CMOS.

Authorized licensed use limited to: Westlake University. Downloaded on March 22,2026 at 08:37:36 UTC from IEEE Xplore. Restrictions apply.

 979-8-3315-8936-3/26/$31.00 ©2026 IEEE