Presented by Jillienne Lapid

# FINAL PROJECT PRESENTATION

# AGENDA

1. Project Overview
2. Materials
3. Methods
4. Results
5. Discussion
6. Q&A

# PROJECT OVERVIEW

**OBJECTIVE**: Designing and Constructing a Line-following Robot

**GOALS:**

- Create a low-cost, effective robot.
- Develop a logic system to handle sensor data and output commands.
- Create an algorithm for data handling and line-following

# MATERIALS

| Part Name | Amount | Purpose |
|---|---|---|
| STM32 Nucleo F446RE Board | x1 | Runs embedded system and logic control. |
| HW-511 Infrared Sensor | X3 | Detects line. |
| L298N Motor Driver | x1 | Manages the motor’s commands. |
| DC Motor | x2 | Rotates a wheel. |
| Wheel | x2 | Allows for rolling movement of the robot. |
| Dexter Industries 3-wheel Chassis | x1 | The main body of the robot. |
| 11.1V Li-Po Battery (2200mAh) | x1 | Gives power to Motor Driver and Motors. |
| XT60 Battery Connector | x1 | Provides output wires from Li-Po Battery. |
| 5V Power Bank | x1 | Gives power to the STM32. |
| Wires/Breadboard | - | Allows for connection of elements. |
| Screws/Hardware | - | Use for mounting elements. |

# METHODS

## STM32 Configuration

STM32 CubeIDE

- ADC to Get Analog IR Sensor Values
- DMA for Storing ADC values to a Buffer
- PWM for Controlling Motor Speed
- Semaphore for Critical Section Protection
- FreeRTOS for Task Scheduling
- UART for Debugging/Logging

# METHODS (CONT.)

## STM32 Configuration

**ADC**

STM32 Pins: PA0, PA1, PB0

Used ADC1

Enabled ADC Input on Pins

**DMA**

DMA2, Stream 0

Mode: Circular

Data Width: Word

**PWM**

STM32 Pins: PA8, PA9, PC7, PB6

| | | |
|---|---|---|
| PA8 | TIM1 CH1 | Right, Forward |
| PA9 | TIM1 CH2 | Right, Backward |
| PC7 | TIM3 CH2 | Left, Forward |
| PB6 | TIM4 CH1 | Left Backward |

**UART**

USART2 as Asynchronous

# METHODS (CONT.)

## Block Diagram

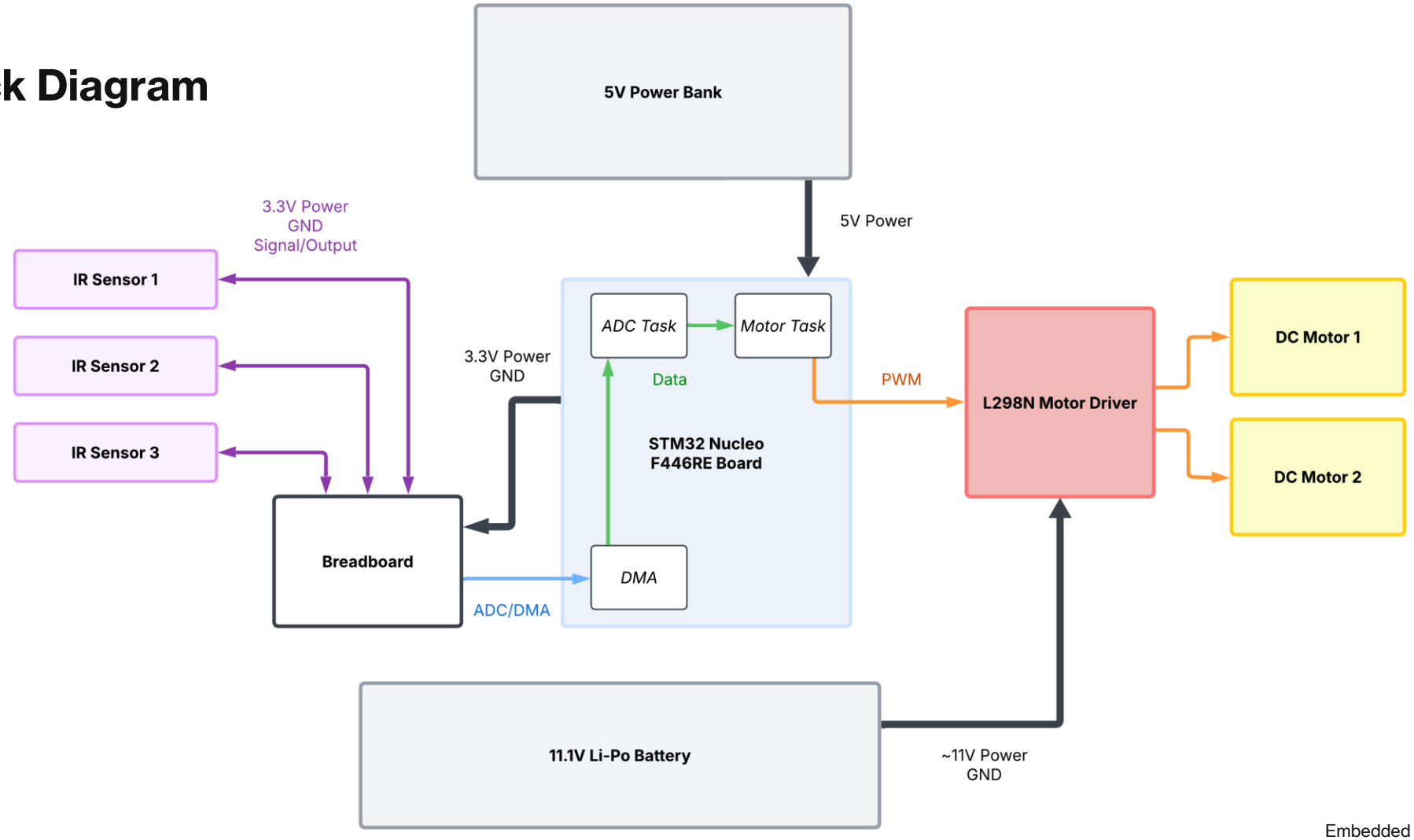

# METHODS (CONT.)

## Control Algorithm:

- Stop When Line-Lost
- Conditional Value Control Logic

**Sees Just Middle : Go Forward**

**Sees Right and Middle : Go Left**

**Sees Left and Middle : Go Right**

**Sees Left and Right : Go Forward**

**No Line Detected : Stop**

# METHODS (CONT.)

STM32 CubeProgrammer

## Final Isolated Setup

- Flashed Program to Board
- Connected Board to Power Bank
- Created Line with Electrical Tape

# RESULTS

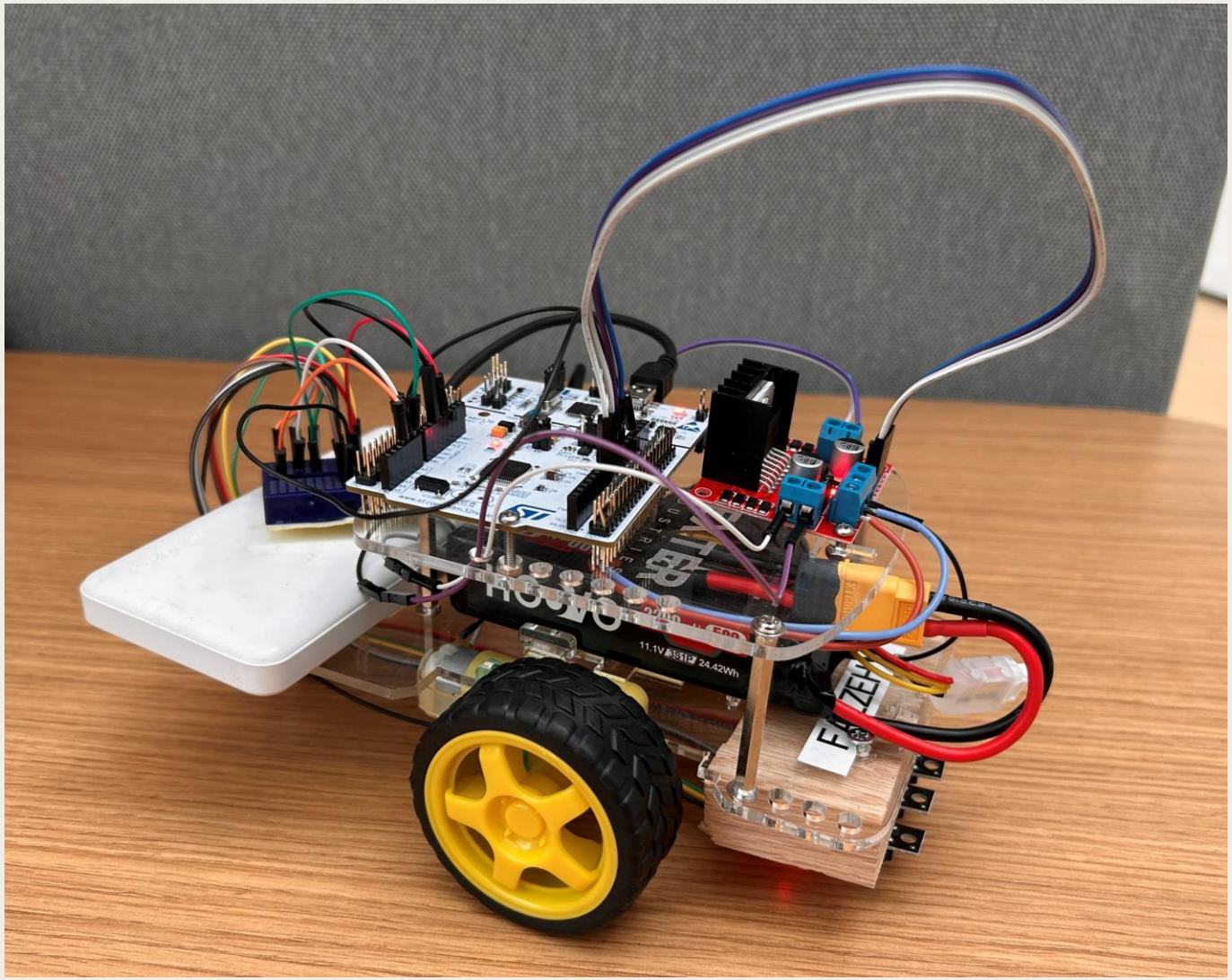

# RESULTS (CONT.)

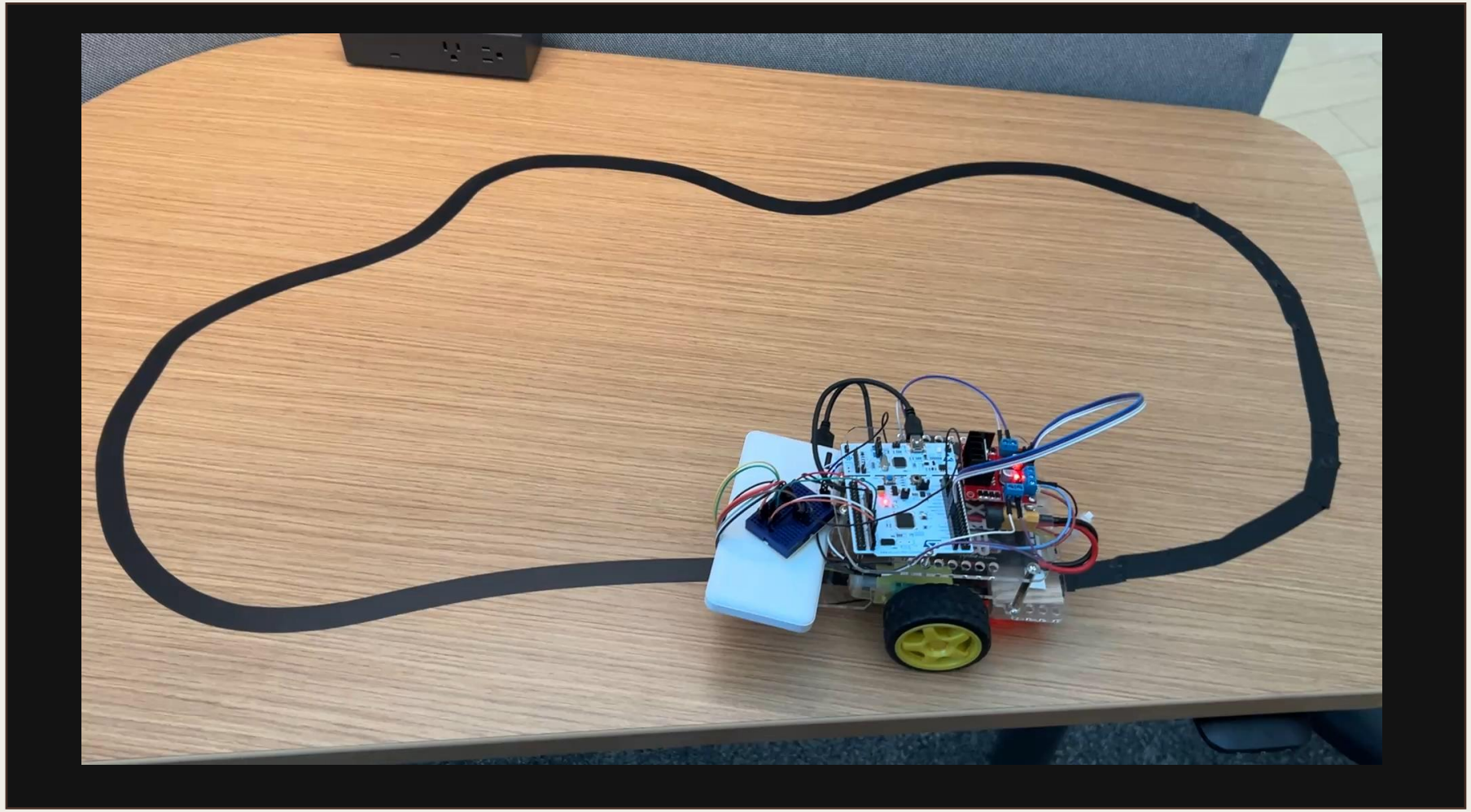

# DISCUSSION

**The Good:**

- Robot Successfully Followed a Line
- Robot Construction was Successful

**Improvements:**

- More IR Sensors for More Data
- PD or PID Controller
- More Refined Assembly

# THANK YOU!

# Q&A