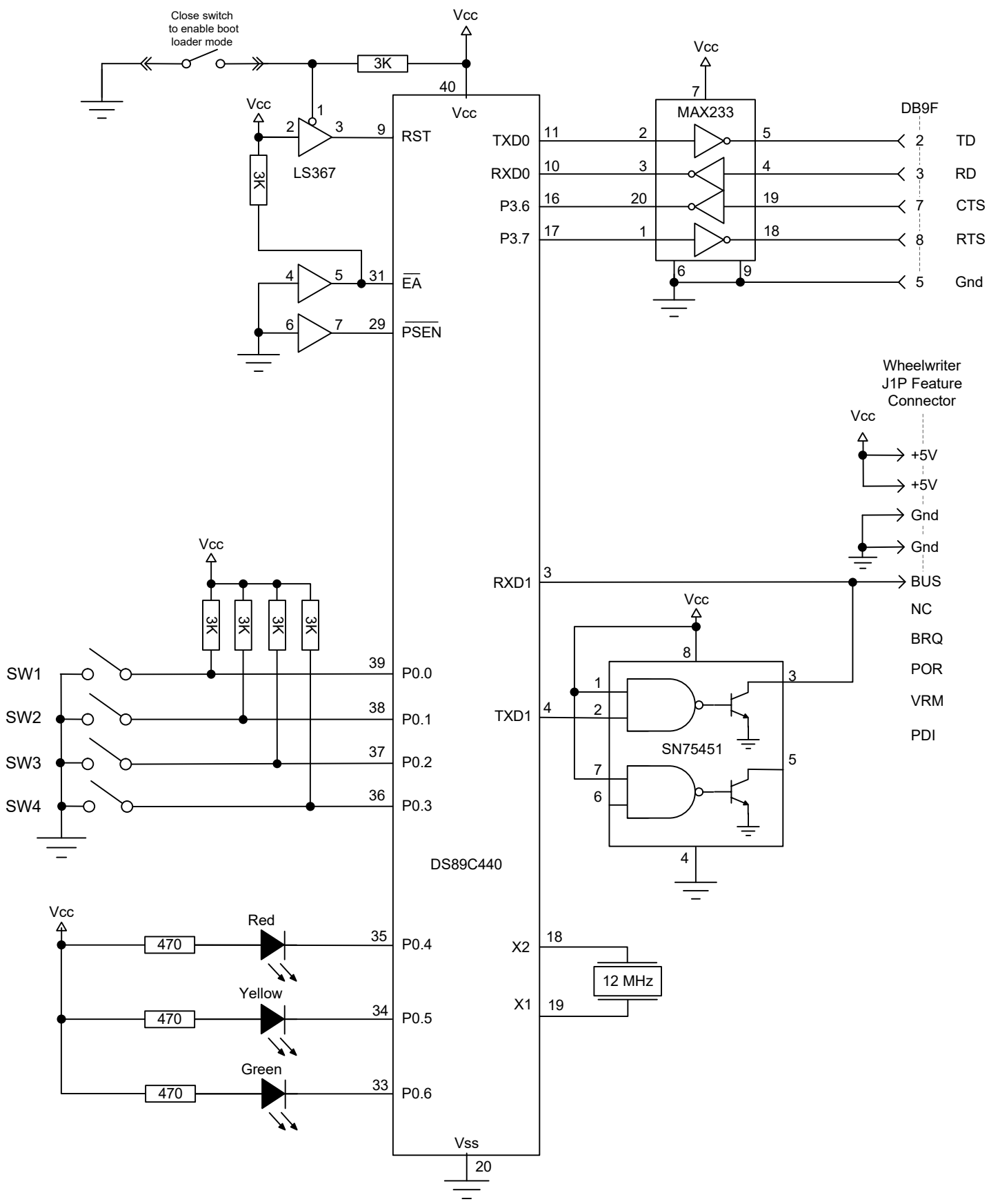

DS89C440 Wheelwriter Interface

Drawn by: jsl

Date: