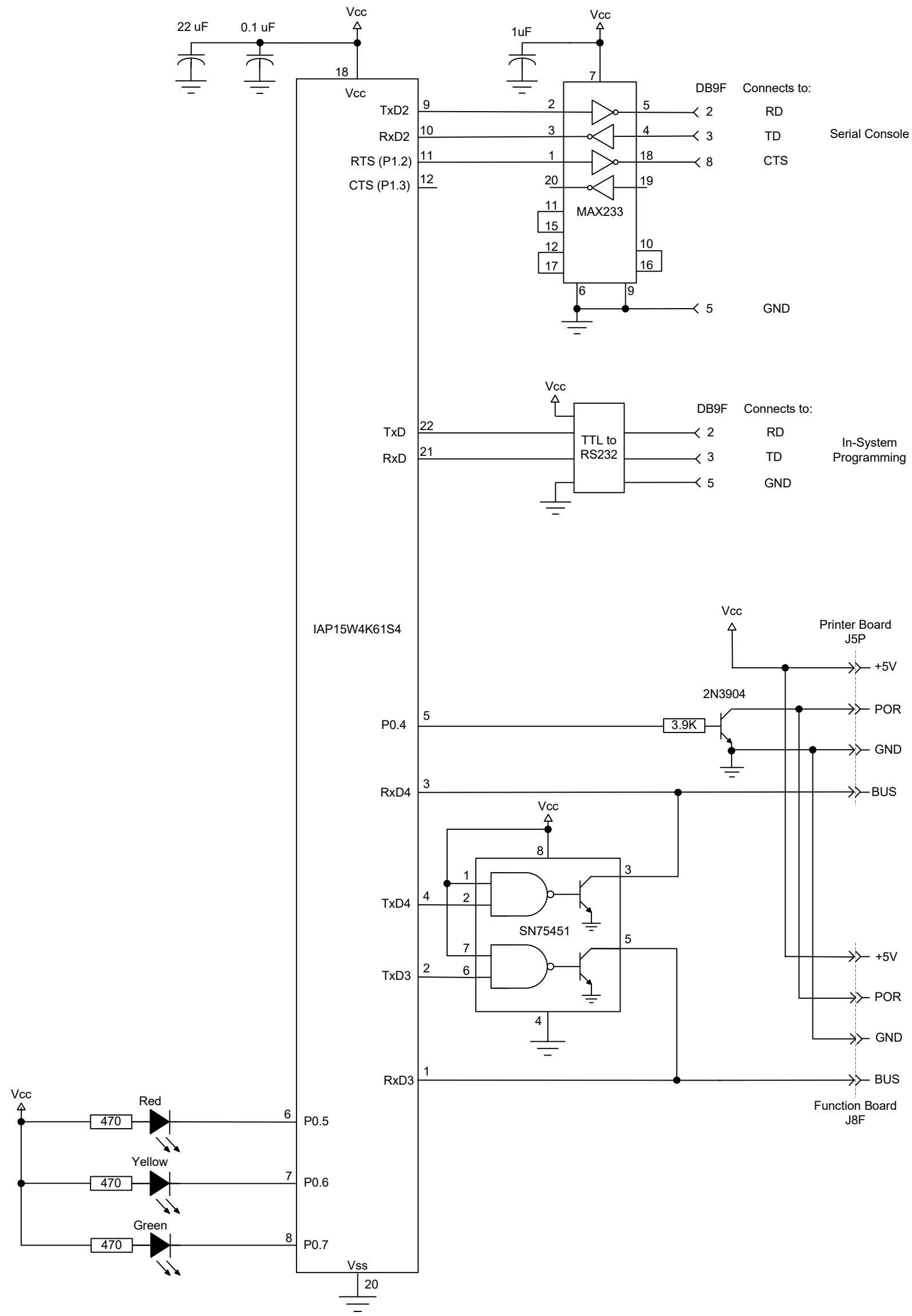

IAP15W4K61A4
Wheelwriter “Teletype” Interface

Drawn by: jsl

Date: