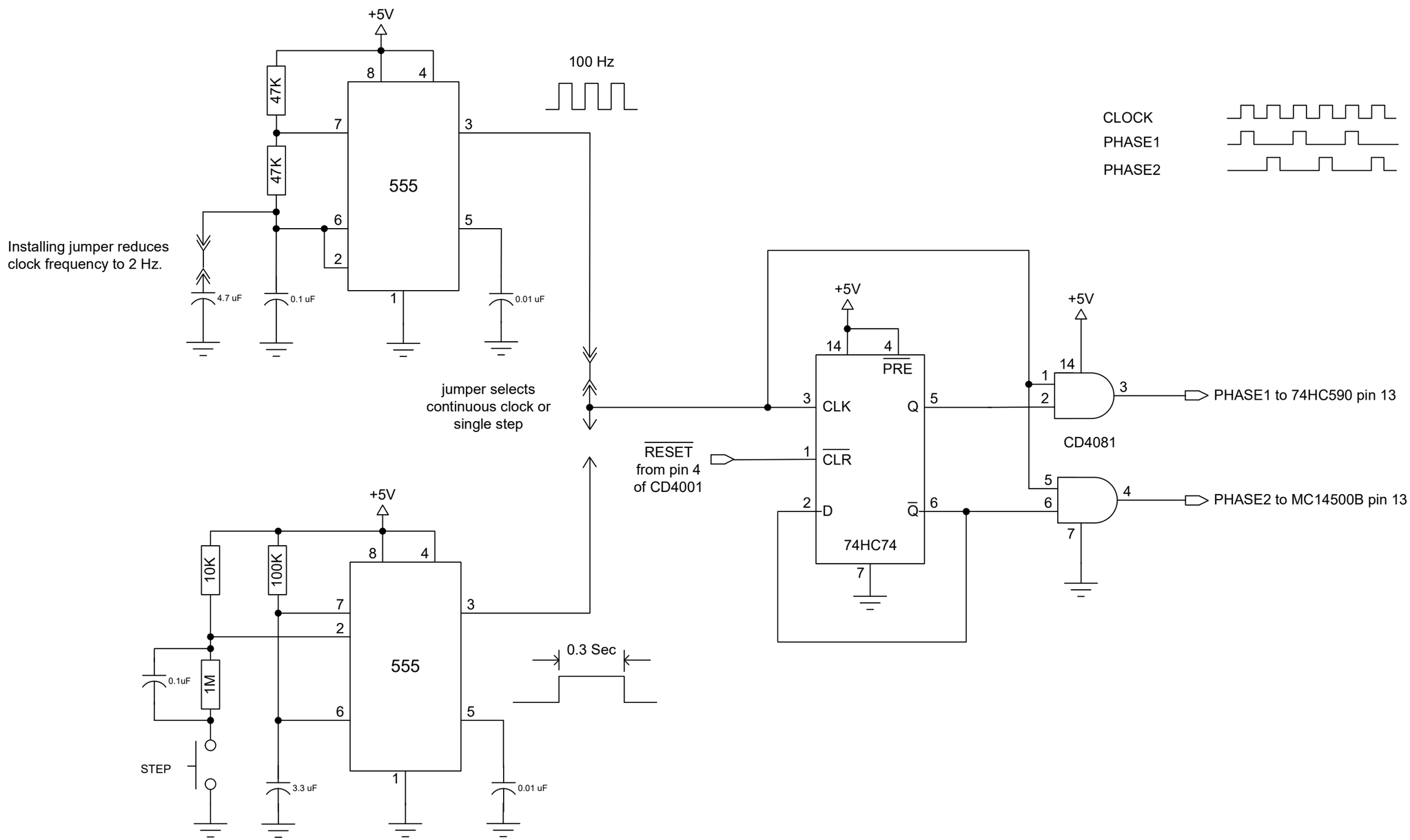

MC14500B Clock

Drawn by: jsl

Date:

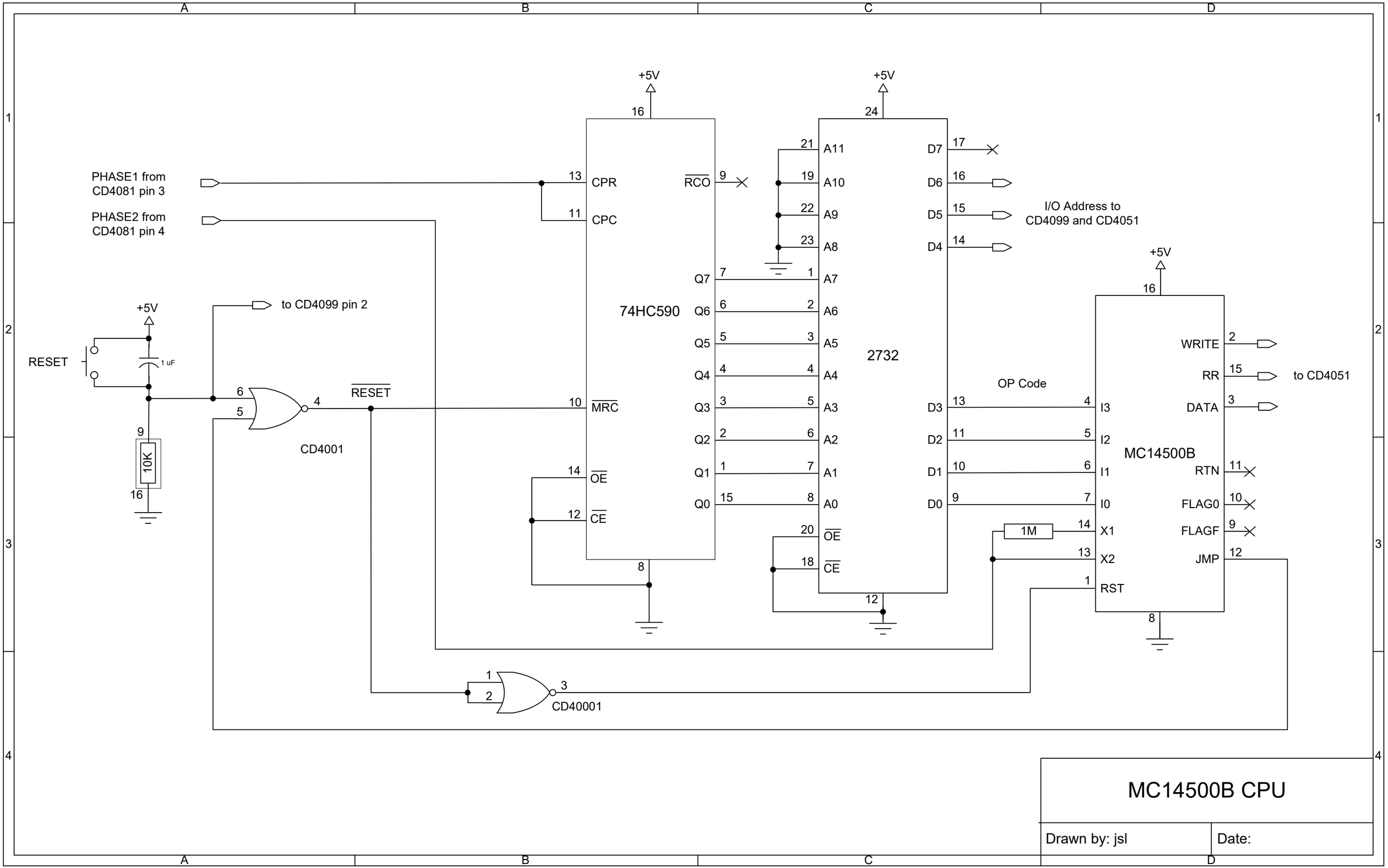

MC14500B CPU

Drawn by: jsl

Date:

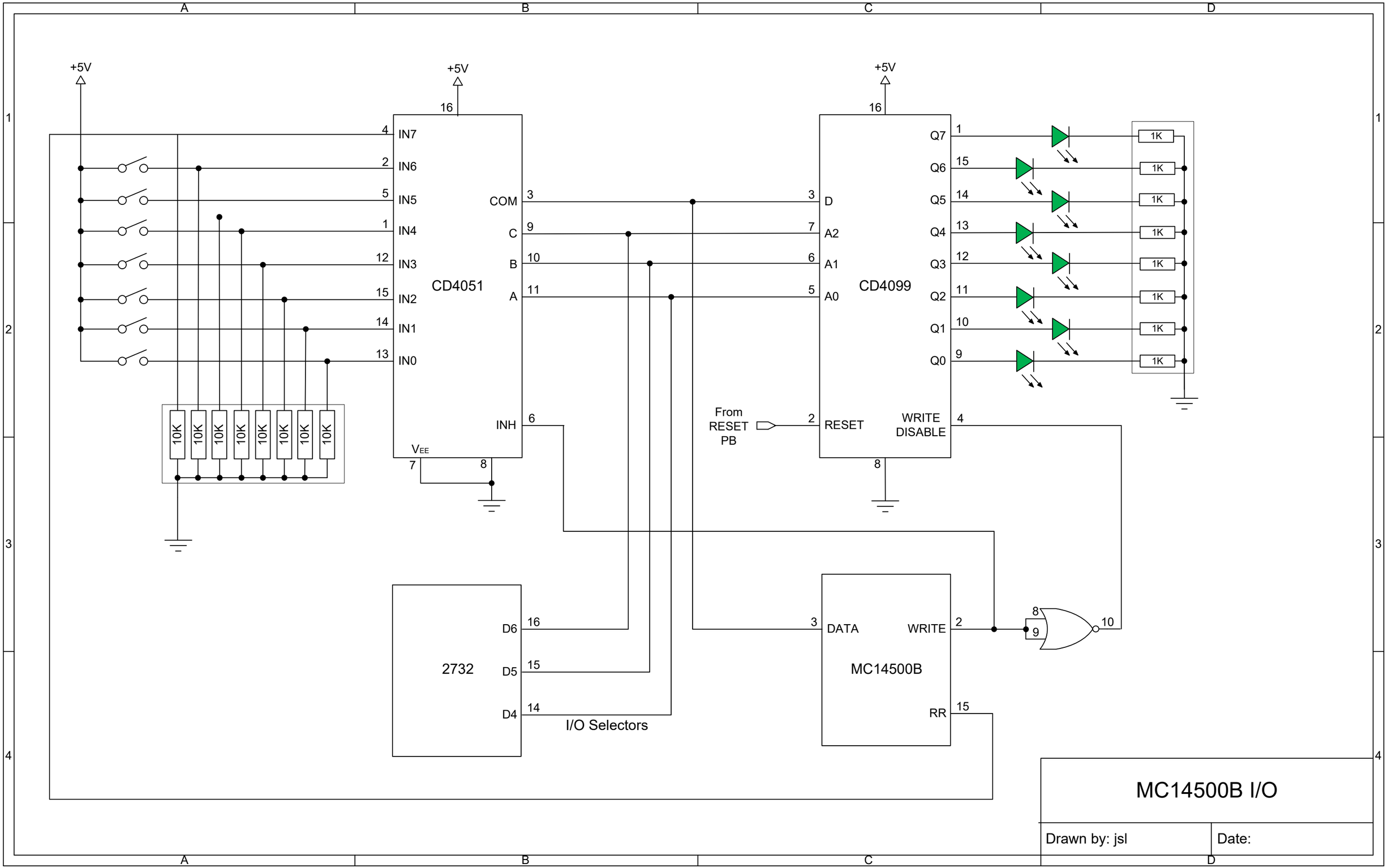
+5V
+5V
+5V
16
16
IN7
IN6
IN5
IN4
IN3
IN2
IN1
IN0
COM
C
B
A
INH
VEE
CD4051
10K
10K
10K
10K
10K
10K
10K
10K
Q7
Q6
Q5
Q4
Q3
Q2
Q1
Q0
D
A2
A1
A0
CD4099
RESET
WRITE DISABLE
From RESET PB
1K
1K
1K
1K
1K
1K
1K
1K
2732
D6
D5
D4
I/O Selectors
DATA
WRITE
MC14500B
RR
MC14500B I/O
Drawn by: jsl
Date:

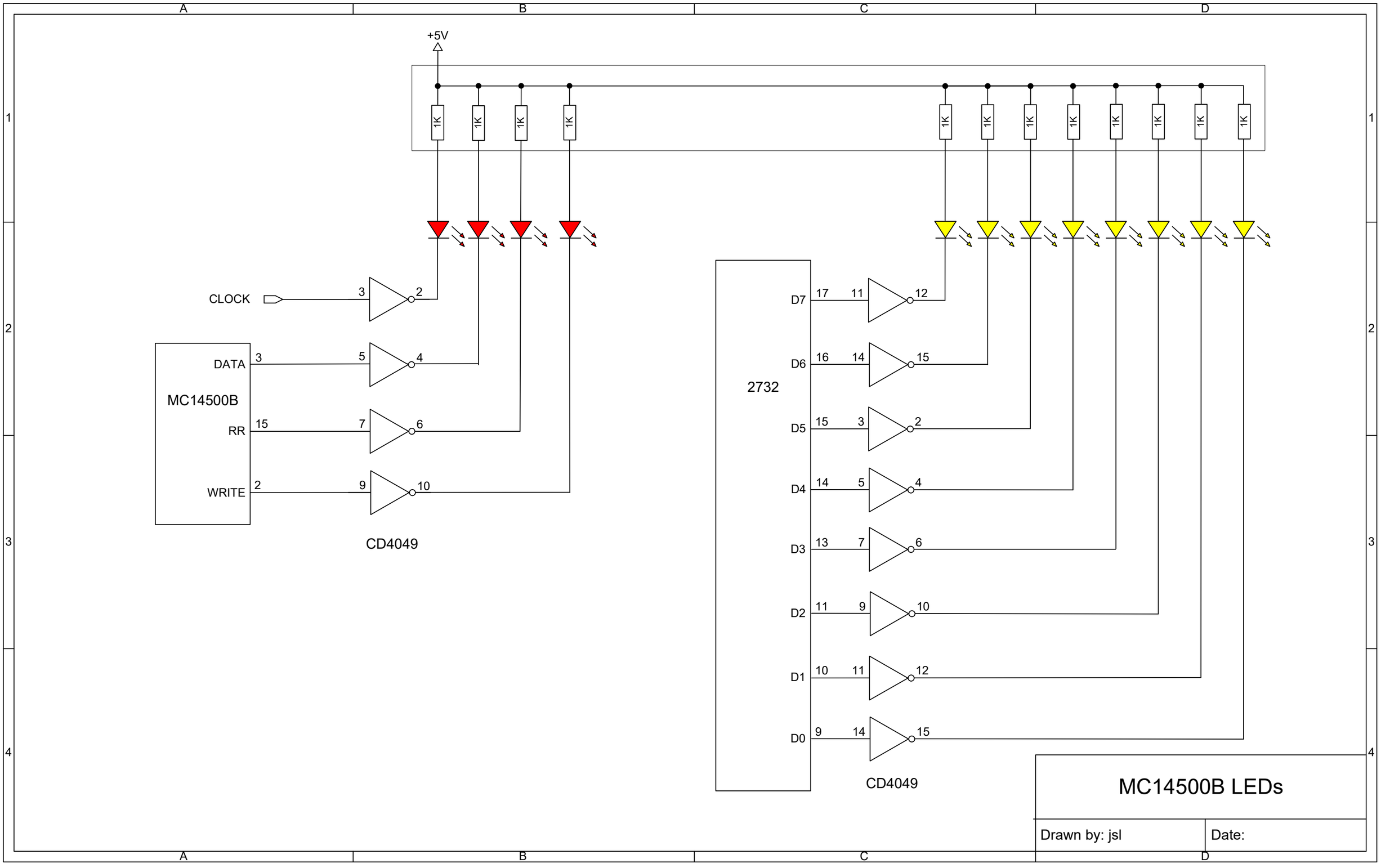
+5V
1K
CLOCK
DATA
MC14500B
RR
WRITE
CD4049
2732
D7
D6
D5
D4
D3
D2
D1
D0
CD4049
MC14500B LEDs
Drawn by: jsl
Date: