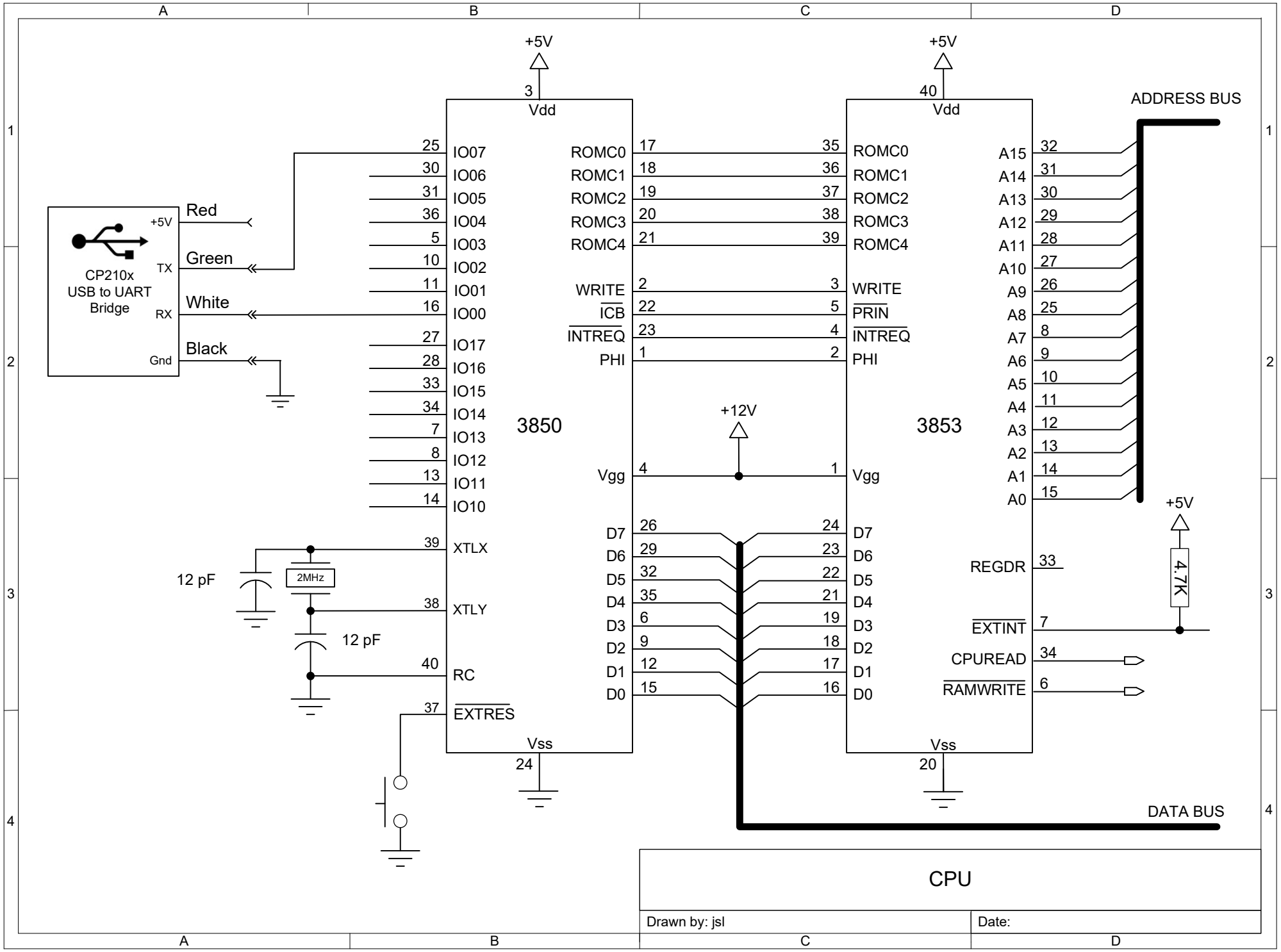
CP210x
USB to UART
Bridge
+5V
TX
RX
Gnd
Red
Green
White
Black
3850
3853
Vdd
Vss
Vgg
+5V
+12V
IO07
IO06
IO05
IO04
IO03
IO02
IO01
IO00
IO17
IO16
IO15
IO14
IO13
IO12
IO11
IO10
XTLX
XTLY
RC
EXTRES
ROMC0
ROMC1
ROMC2
ROMC3
ROMC4
WRITE
ICB
INTREQ
PHI
PRIN
D7
D6
D5
D4
D3
D2
D1
D0
A15
A14
A13
A12
A11
A10
A9
A8
A7
A6
A5
A4
A3
A2
A1
A0
REGDR
EXTINT
CPUREAD
RAMWRITE
ADDRESS BUS
DATA BUS
12 pF
2MHz
12 pF
4.7K
CPU
Drawn by: jsl
Date:

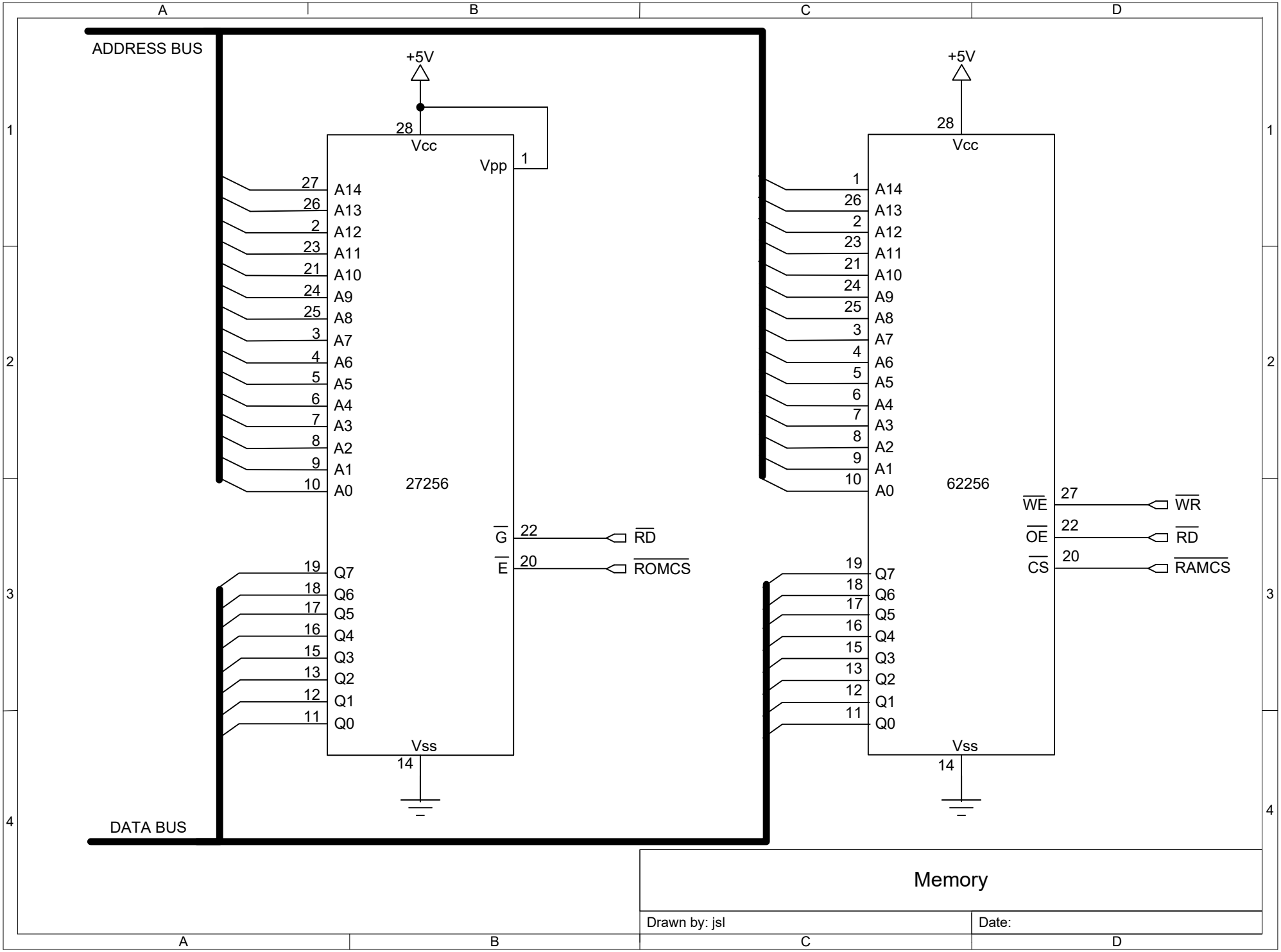
ADDRESS BUS
DATA BUS
+5V
28
Vcc
Vpp
1
27256
A14
A13
A12
A11
A10
A9
A8
A7
A6
A5
A4
A3
A2
A1
A0
Q7
Q6
Q5
Q4
Q3
Q2
Q1
Q0
G
E
RD
ROMCS
Vss
14
+5V
28
Vcc
62256
WE
OE
CS
WR
RD
RAMCS
Vss
14
Memory
Drawn by: jsl
Date:

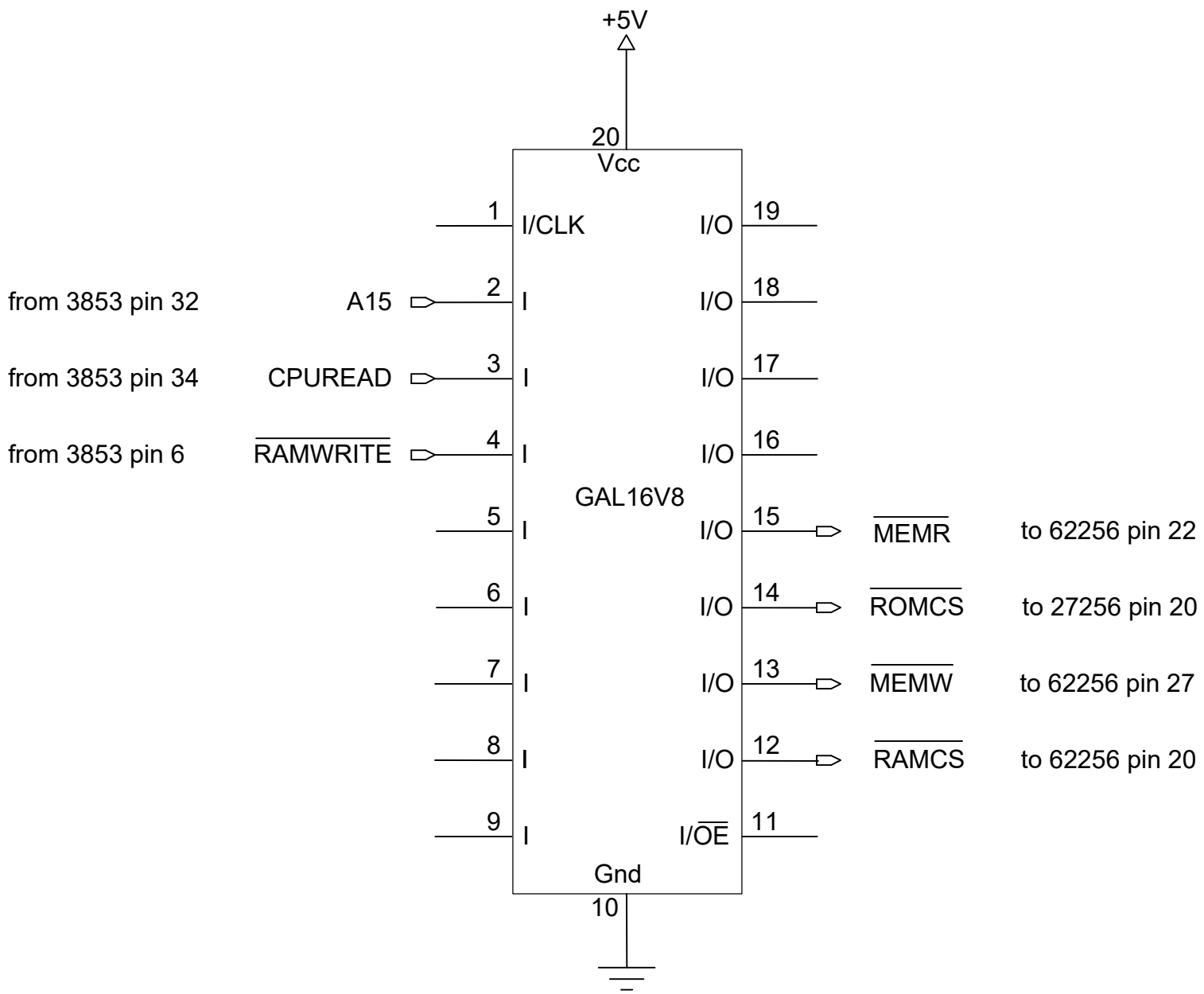

Address Decoding

Drawn by: jsl

Date:

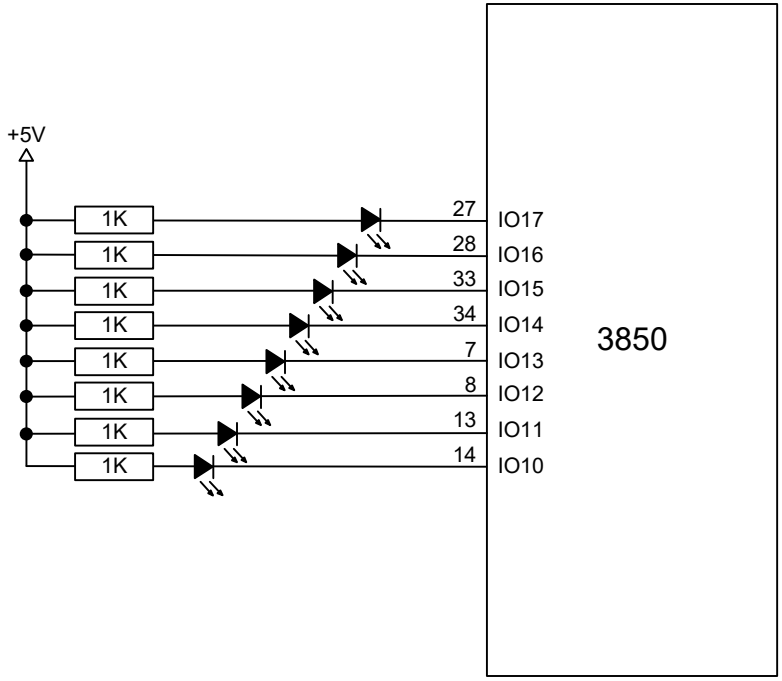

LEDs

Drawn by: jsl

Date:

Looking into the board mounted female DIN socket

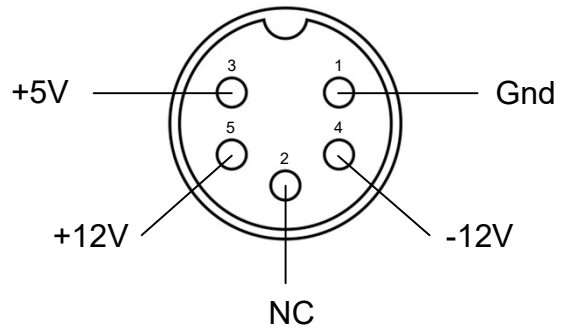

DIN Power Connector

Drawn by: jsl

Date: