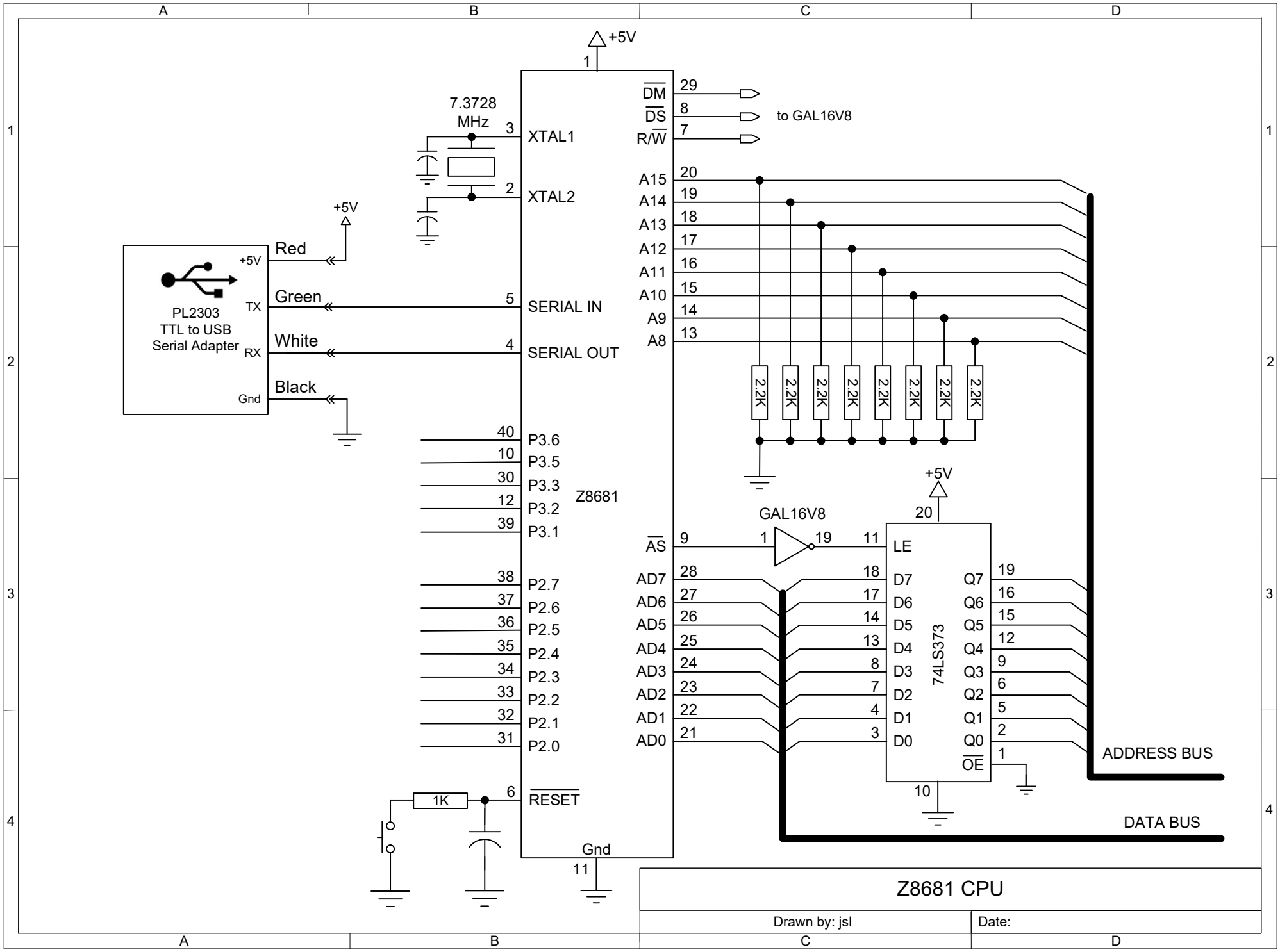
+5V
1
7.3728
MHz
3
XTAL1
2
XTAL2
DM
DS
R/W
29
8
7
to GAL16V8
A15
A14
A13
A12
A11
A10
A9
A8
20
19
18
17
16
15
14
13
2.2K
+5V
Red
+5V
PL2303
TTL to USB
Serial Adapter
TX
Green
5
SERIAL IN
RX
White
4
SERIAL OUT
Gnd
Black
40
P3.6
10
P3.5
30
P3.3
12
P3.2
39
P3.1
Z8681
38
P2.7
37
P2.6
36
P2.5
35
P2.4
34
P2.3
33
P2.2
32
P2.1
31
P2.0
1K
6
RESET
Gnd
11
GAL16V8
AS
9
1
19
+5V
20
LE
11
AD7
AD6
AD5
AD4
AD3
AD2
AD1
AD0
28
27
26
25
24
23
22
21
D7
D6
D5
D4
D3
D2
D1
D0
18
17
14
13
8
7
4
3
74LS373
Q7
Q6
Q5
Q4
Q3
Q2
Q1
Q0
OE
19
16
15
12
9
6
5
2
1
10
ADDRESS BUS
DATA BUS
Z8681 CPU
Drawn by: jsl
Date:

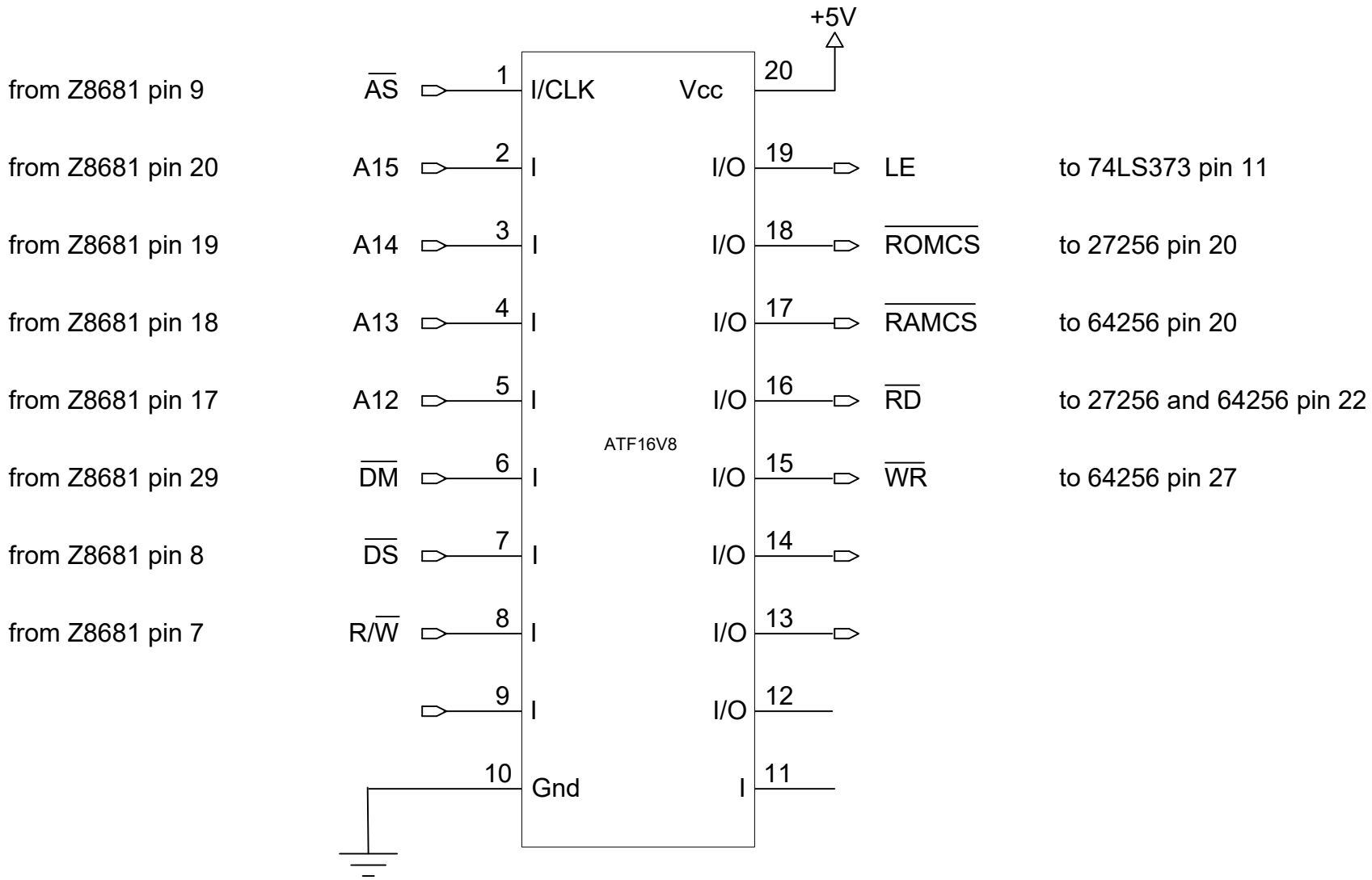

GAL16V8

Drawn by: jsl

Date:

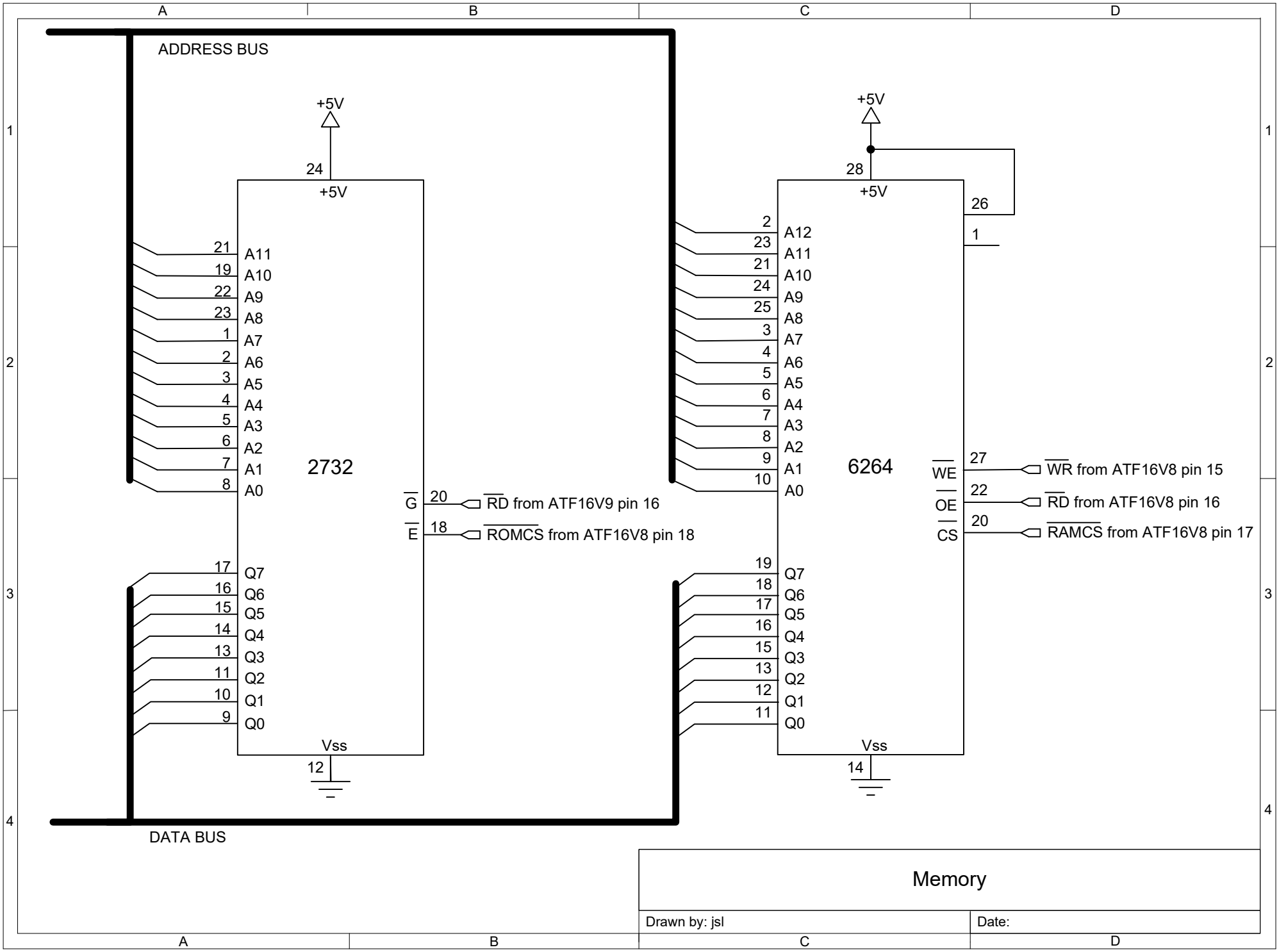
ADDRESS BUS
+5V
24
+5V
21 A11
19 A10
22 A9
23 A8
1 A7
2 A6
3 A5
4 A4
5 A3
6 A2
7 A1
8 A0
2732
G 20 RD from ATF16V9 pin 16
E 18 ROMCS from ATF16V8 pin 18
17 Q7
16 Q6
15 Q5
14 Q4
13 Q3
11 Q2
10 Q1
9 Q0
Vss
12
DATA BUS
+5V
28
+5V
26
1
2 A12
23 A11
21 A10
24 A9
25 A8
3 A7
4 A6
5 A5
6 A4
7 A3
8 A2
9 A1
10 A0
6264
WE 27 WR from ATF16V8 pin 15
OE 22 RD from ATF16V8 pin 16
CS 20 RAMCS from ATF16V8 pin 17
19 Q7
18 Q6
17 Q5
16 Q4
15 Q3
13 Q2
12 Q1
11 Q0
Vss
14
Memory
Drawn by: jsl
Date: