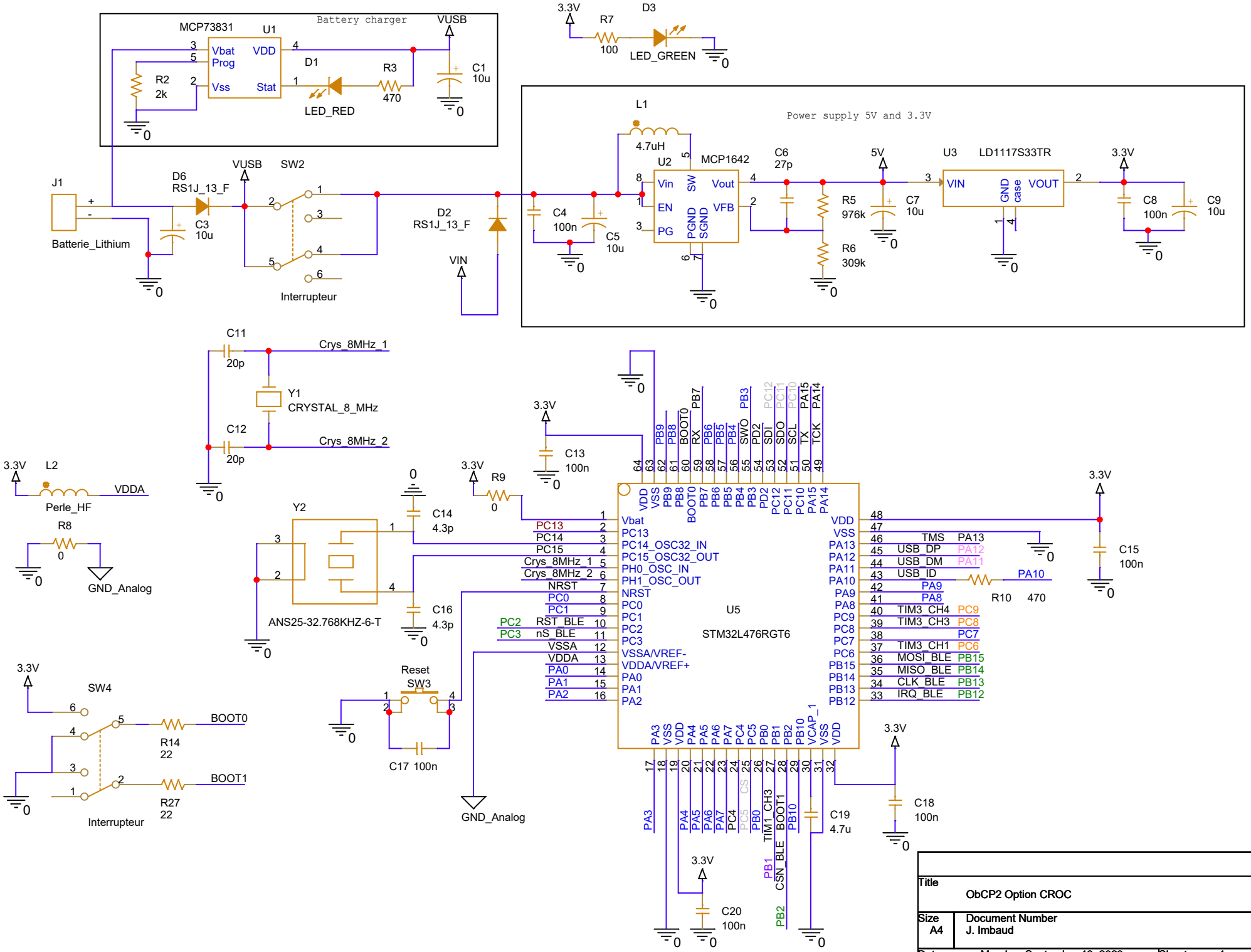
Battery charger
MCP73831
U1
Vbat
Prog
Vss
VDD
Stat
VUSB
D1
LED_RED
R3
470
R2
2k
C1
10u
3.3V
R7
100
D3
LED_GREEN
Power supply 5V and 3.3V
L1
4.7uH
U2
MCP1642
Vin
EN
PG
SW
PGND
SGND
Vout
VFB
C4
100n
C5
10u
C6
27p
R5
976k
R6
309k
5V
C7
10u
U3
LD1117S33TR
VIN
GND case
VOUT
C8
100n
C9
10u
J1
Batterie_Lithium
D6
RS1J_13_F
C3
10u
SW2
Interrupteur
D2
RS1J_13_F
VIN
C11
20p
Crys_8MHz_1
Y1
CRYSTAL_8_MHz
C12
20p
Crys_8MHz_2
L2
Perle_HF
VDDA
R8
0
GND_Analog
Y2
ANS25-32.768KHZ-6-T
C14
4.3p
C16
4.3p
R9
0
C13
100n
U5
STM32L476RGT6
Vbat
PC13
PC14_OSC32_IN
PC15_OSC32_OUT
PH0_OSC_IN
PH1_OSC_OUT
NRST
PC0
PC1
PC2
PC3
VSSA/VREF-
VDDA/VREF+
PA0
PA1
PA2
VDD
VSS
PA13
PA12
PA11
PA10
PA9
PA8
PC9
PC8
PC7
PC6
PB15
PB14
PB13
PB12
TMS
USB_DP
USB_DM
USB_ID
TIM3_CH4
TIM3_CH3
TIM3_CH1
MOSI_BLE
MISO_BLE
CLK_BLE
IRQ_BLE
RST_BLE
nS_BLE
R10
470
C15
100n
Reset
SW3
C17 100n
SW4
BOOT0
R14
22
BOOT1
R27
22
Interrupteur
C18
100n
C19
4.7u
C20
100n
Title
ObCP2 Option CROC
Size
A4
Document Number
J. Imbaud
Rev
2.3
Date:
Monday, September 18, 2023
Sheet
1
of
2