OPERATOR'S GUIDE: 2001 ULTRASONIC VALVE BAG SEALER

Contents

1 PURPOSE 1
2 SCOPE 2
3 CONTROL PANEL DESCRIPTION 2
Main Controls (See Figure 1) 2
Sealing Controls (See Figure 1) 3
4 PREPARING FOR A BAGGING RUN 3
5 STARTING 4
6 STOPPING 5
Non-Emergency Stops 5
Emergency Stops 5
7 USING BYPASS MODE 5
8 ADJUSTING FOR CHANGES IN BAG SIZE AND PRODUCT 5
9 PREVENTIVE MAINTENANCE CHECKS AND SERVICES 6
Before Use 6
Before and After Use 6
Before, During, and After Use 6
10 TROUBLESHOOTING GUIDE 6

1 PURPOSE

This guide assists operators of the model 2001 Ultrasonic Valve Bag Sealer in the performance of everyday tasks, with one goal in mind: effective, efficient bag packaging. This guide provides step-by-step instructions in starting and stopping the machine, a brief description of its controls, some basic preventative maintenance checks and services, and a variety of troubleshooting questions most often asked by operators.

Before starting, it is important to note that this guide should complement, and not substitute for, hands-on training by a knowledgeable instructor. Operators will find this guide most useful as a refresher, after already becoming familiar with the proper operation of the sealer.

2 SCOPE

Most of all, this guide benefits the everyday operator of the sealer. Maintenance personnel and supervisors probably will require the added depth found in the lengthier manual provided with the machine.

3 CONTROL PANEL DESCRIPTION

The 2001 Ultrasonic Sealer's control panel contains all controls necessary for both automatic and manual sealing.

Figure 1: 2001 Sealer control panel

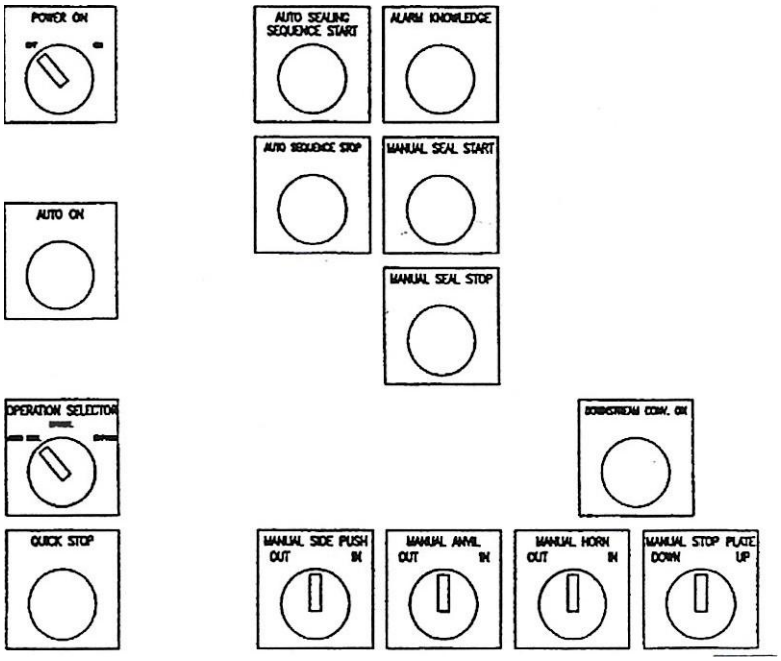

Main Controls (See Figure 1)

- **POWER ON** selector switch/indicator lamp: Turning this switch to the **ON** position lights the switch's blue lamp, indicating that control power is on, and allows the operator to use the control panel.
- **AUTO ON** lamp: This green lamp, when lit, indicates that the sealer is in automatic sealing mode.
- **OPERATION SELECTOR** switch: Adjusting this switch to the **AUTO SEALING** setting puts the sealer in automatic mode and lights the green **AUTO ON** lamp. Adjusting this switch to the **MANUAL** setting allows manual operation of the sealer. Operators may also use the **OPERATION SELECTOR** switch to set the sealer into BYPASS mode, which allows bags to pass through the sealer without being sealed.

- **QUICK STOP** illuminated push/pull button: Pushing this button will stop all motion on the sealer immediately and light the red indicator light on the switch. The **QUICK STOP** switch is only to be used for emergency stops.

  NOTE: You must pull the **QUICK STOP** switch out before attempting to restart the sealer.

  NOTE: The main electrical enclosure also has a **QUICK STOP** push/pull button, which has the same function.

- **DOWNSTREAM CONVEYOR ON** indicator lamp: This amber lamp, when lit, indicates when downstream conveyors--those leading away from the sealer--are running. If this lamp switches off, the sealer seals the current bag and then stops sealing. The next bag will stop at the photoeye on the sealer's entrance conveyor. An interlock with the conveyor system will cause the upstream conveyor to also stop.

Sealing Controls (See Figure 1)

- **AUTO SEALING SEQUENCE START** push-button/indicator lamp: Pushing this button starts the sealer and lights the green indicator lamp.
- **AUTO SEALING SEQUENCE STOP** push-button: Pushing this button stops an automatic sealing run.
- **ALARM ACKNOWLEDGE** push-button/indicator lamp: When lit, the amber light on this button indicates an alarm. A steady light indicates that an alarm is occurring; a blinking light indicates that an alarm has occurred in the past but has now ceased. Pressing the **ALARM ACKNOWLEDGE** push-button while the light is blinking turns the light off.

  NOTE: This alarm may cause the sealer to stop running.

  NOTE: This button also serves as an external reset button--it performs the same function as the **RESET** button on the ultrasonic power supply controller, clearing any alarms that the controller may be indicating.

- **MANUAL SEALING START** push-button: Pressing this button causes the anvil/horn mechanism to seal a bag, provided that the operator holds the button down long enough for the horn to begin sealing the bag.
- **MANUAL SEALING STOP** push-button: Pressing this button stops the horn from sealing a bag during a manual sealing.

4 PREPARING FOR A BAGGING RUN

Make the following preparations before actually starting the machine.

1. If necessary, clear the sealer's conveyors of all bags, making sure that nothing is blocking the photoeyes. Accomplish this by locking out the equipment and removing the bags by hand. Alternatively, you can:

    a. Set the **OPERATION SELECTOR** switch to the **MANUAL** position
    b. Turn the **MANUAL STOP PLATE** switch to the **UP** position, holding the switch in place until the front stop plate has fully retracted. The conveyor will start moving, enabling the bags to exit the sealer.
    c. Turn the **MANUAL STOP PLATE** switch to the **DOWN** position, holding the switch in place until the front stop plate has extended back to its original position.
    d. Set the **OPERATION SELECTOR** switch to the **AUTO SEALING** position.
2. Make sure that the anvil and horn are fully retracted.
3. Check that the side push plate is fully retracted.
4. Make sure that the front stop plate is down.
5. Adjust the air regulator's compressed air pressure to 80 pounds per square inch gauge (psig), if required. If you cannot adjust the pressure to higher than 60 psig, **do not** use the sealer.
6. Switch on the main electrical enclosure's main disconnect, by moving the lever upwards. (The lever is on the right side of the main electrical enclosure control panel.) Set the **POWER ON** selector switch, located on the operator control panel, to the **ON** position.
7. Make sure that the ultrasonic power supply is turned on, and that the **RDY** signal appears on the LCD display.

5 STARTING

The steps below give instructions for a sealing run in which the filled bag size and product density are the same as the filled bag size and product density in the most recent sealing run. See Section 8 of this guide for instructions in adjusting the machine for changes in bag size or product density.

1. Make sure that both of the **QUICK STOP** pushbuttons--one on the main enclosure and one on the control panel--are pulled out. The red indicator light on both **QUICK STOP** buttons should be off; pull out any lit buttons.
2. Set the **OPERATION SELECTOR** switch to the **AUTO SEALING** position. The green **AUTO ON** lamp will light.
3. Push the green **AUTO SEALING SEQUENCE START** push-button. The green lamp on the button will activate. All air cylinders will reset to home position, the conveyors will start moving, and the sealer will be ready to start sealing bags.

6 STOPPING

Non-Emergency Stops

An operator may use the **AUTO SEQUENCE STOP** push-button to perform non-emergency stops.

1. Push the red **AUTO SEQUENCE STOP** push-button to stop the sealer.

   NOTE: For an end-of-shift shutdown, be sure the sealer is clear of all bags before pressing the **AUTO SEQUENCE STOP** push-button.

2. Push the green **AUTO SEALING SEQUENCE START** push-button to restart sealing.

Emergency Stops

1. Press the **QUICK STOP** push/pull button to immediately stop all motion on the sealer.
2. To restart the sealer, pull out the **QUICK STOP** push/pull button, manually remove all bags from the sealer, and then press the **AUTO SEALING SEQUENCE START** push-button.

7 USING BYPASS MODE

Some bagging runs may not require bags to be sealed. If this is the case, the sealer may be set to bypass mode, in which the bags simply travel down the sealer's conveyors to the downstream conveyor.

1. Set the **OPERATION SELECTOR** switch to the **BYPASS** mode.
2. Press the **AUTO SEALING SEQUENCE START** push-button.

8 ADJUSTING FOR CHANGES IN BAG SIZE AND PRODUCT

A change in bag size or product density for a bagging run requires an adjustment of the side push plate. Simply loosen the black handles on the side push plate assembly and move the assembly along its tracks to the desired position, before tightening the handles again (see Figure 2).

Figure 2: Side Push Plate Assembly Adjustment

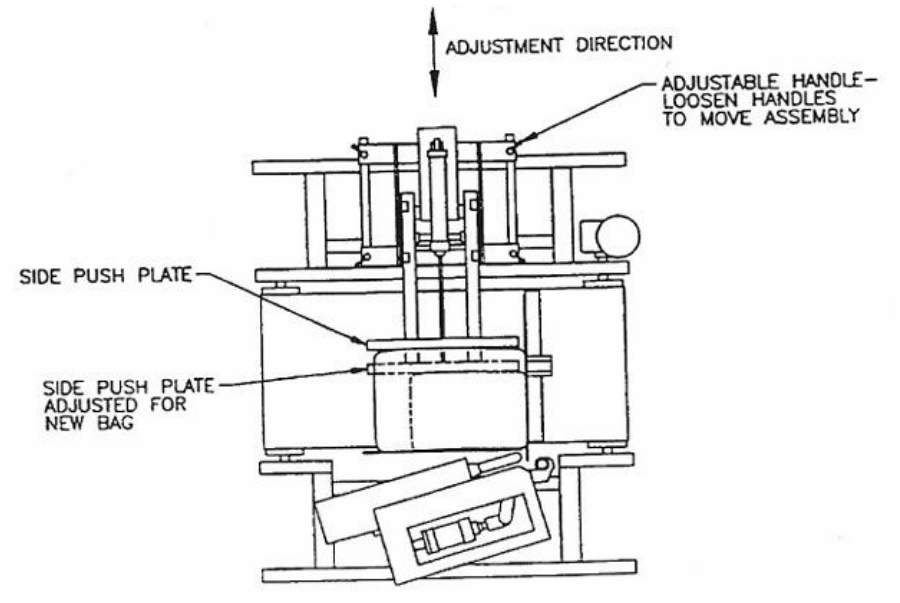

9 PREVENTIVE MAINTENANCE CHECKS AND SERVICES

Before Use

- Make sure that all electrical enclosures are closed and secure.
- Inspect the horn for product accumulation, removing any accumulation as necessary.
- Ensure the proper functioning of all control panel selector switches and indicator lights.

Before and After Use

- Inspect the sealer for accumulation of product; clean as necessary.
- Open the drain cock on the filter and drain any moisture. Report excessive moisture to maintenance.

Before, During, and After Use

Inspect and clean the photoeyes. Turn the machine off when cleaning the photoeyes to avoid false signals.

10 TROUBLESHOOTING GUIDE

Here are solutions to the problems most frequently by operators. If the Troubleshooting Guide does not include your problem, or if the solution listed does not solve your problem, contact your supervisor.

Problem: When I press the AUTO SEALING SEQUENCE START **push-button, nothing happens.**

- Check that the machine is receiving power. Check that all **QUICK STOP** push/pull buttons are pulled out. Check that the **OPERATION SELECTOR** switch is set to the **AUTO SEALING** setting, which the green **AUTO ON** indicator lamp will confirm. Then press the **AUTO SEALING SEQUENCE START** push-button.

Problem: What if the display on the power supply shows error codes, instead of the RDY **or** RUN MODE **codes?**

- Check pages 37-40 of the manual included with the sealer to identify the problem by the error code displayed. Then notify a qualified maintenance person to address the problem.

Problem: The bags are not sealing. The horn and anvil are not contacting the sleeve.

- Have you or another operator changed the bag size without adjusting the side push plate assembly? Is the side push plate assembly adjusted so that the side push plate is moving the bag close enough to the sealing mechanism? See section 8 of this guide for instructions in adjusting the side push plate assembly.

Problem: The sealer has stopped with a bag in the sealer, and the sealer will not send the bag out. The sealer is still set in **AUTO SEALING** mode.

- Make sure that the **DOWNSTREAM CONVEYOR ON** indicator lamp is lit. If the lamp is not lit, the sealer will not continue; make sure that the downstream conveyors are running.

Problem: The sealer has jammed with bags, shutting itself down; it is no longer in AUTO SEALING **mode.**

- A bag blocked the entrance photoeye for more than 2 to 6 seconds, causing a shutdown. Clear all bags from the sealer and press the **AUTO SEALING SEQUENCE START** push-button to restart the sealer.

Problem: I accidentally pressed a QUICK STOP **push/pull button during a bagging run. What do I do?**

Pull out the **QUICK STOP** button, clear all bags from the sealer, and press the **AUTO SEALING SEQUENCE START** push-button to restart the sealer.