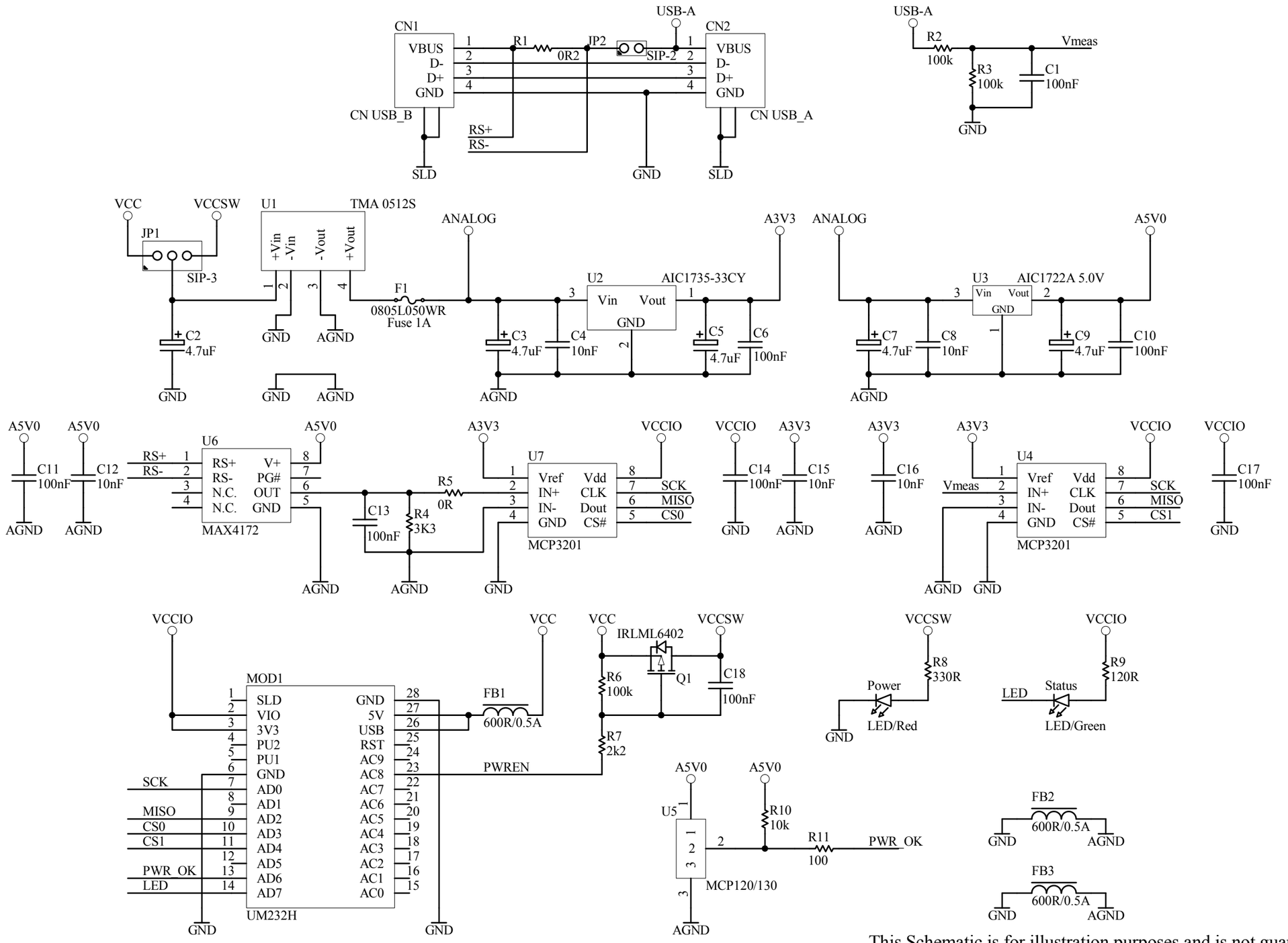

This Schematic is for illustration purposes and is not guaranteed or supported.

Title ***USB Bus Current Sensor SPI Demo Board***		**Future Technology Devices International Ltd.** *Unit 1, 2 Seaward Place Centurion Business Park Glasgow, G41 1HH, UK* *http://www.ftdichip.com*
Size: A4	Number: HW_xxx	Revision: x.y
Date: 10/10/2011 Time: 12:53:16	Sheet 1 of 1	
File: SPI_demo.SchDoc		