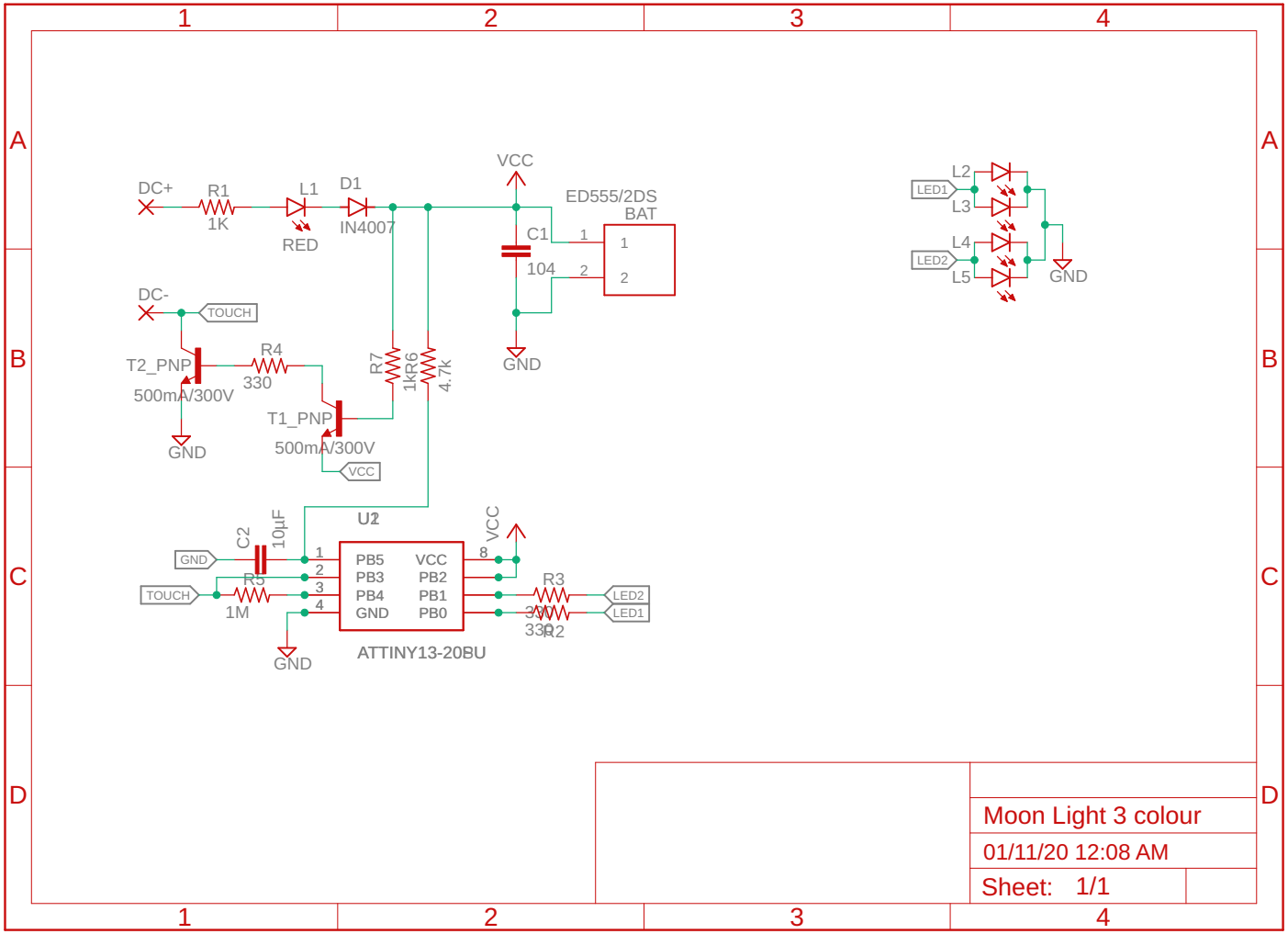

Moon Light 3 colour

01/11/20 12:08 AM

Sheet: 1/1