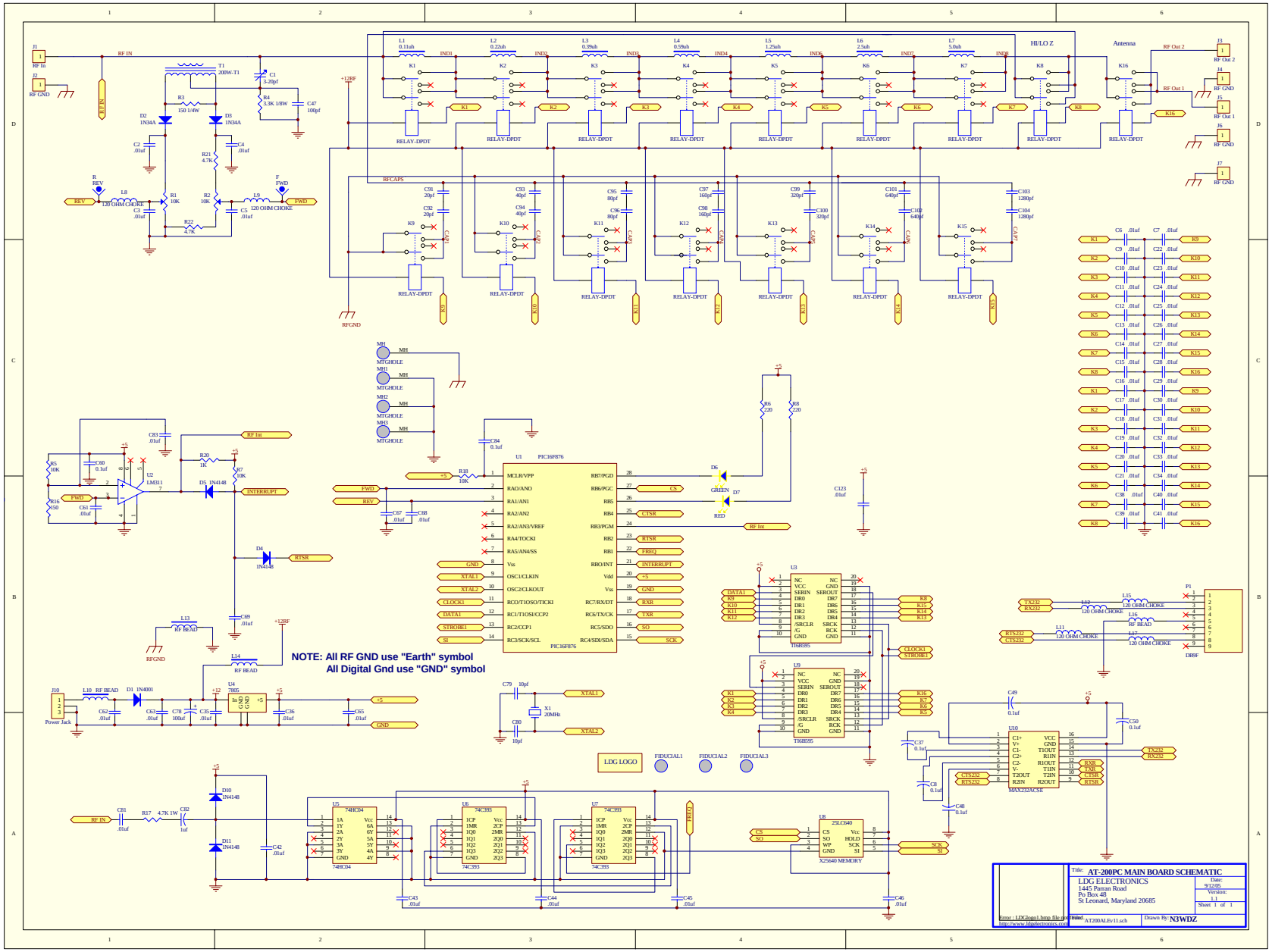
NOTE: All RF GND use "Earth" symbol
All Digital Gnd use "GND" symbol
LDG LOGO
FIDUCIAL1
FIDUCIAL2
FIDUCIAL3
AT-200PC MAIN BOARD SCHEMATIC
LDG ELECTRONICS
1445 Parran Road
Po Box 48
St Leonard, Maryland 20685
Date: 9/12/05
Version: 1.1
Sheet 1 of 1
Drawn By: N3WDZ
Error : LDGlogo1.bmp file not found
http://www.ldgelectronics.com