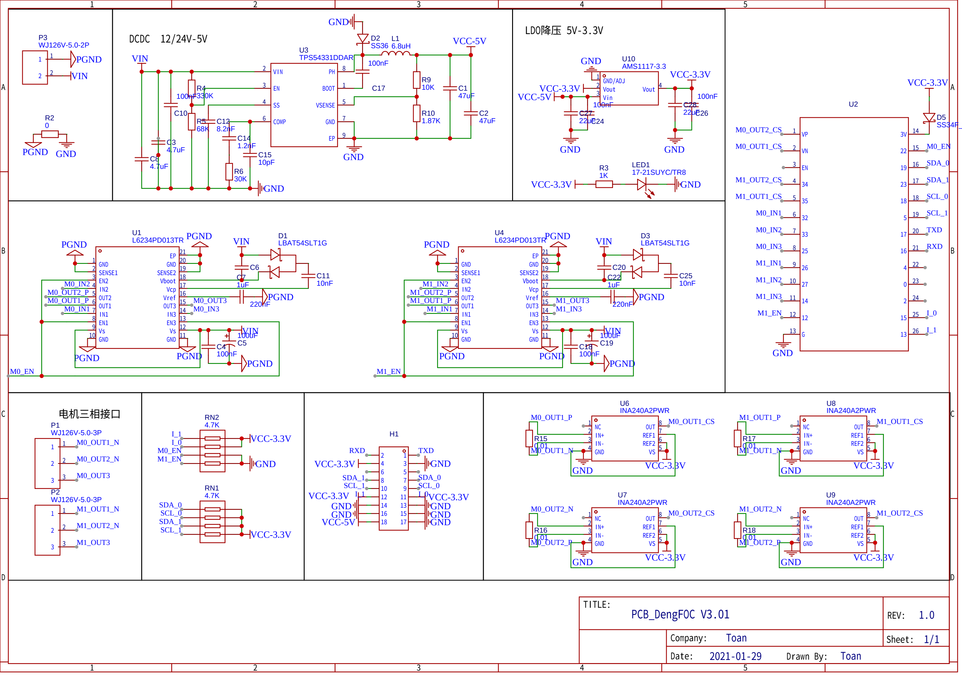

电机三相接口

TITLE: PCB_DengFOC V3.01	REV: 1.0
Company: Toan	Sheet: 1/1
Date: 2021-01-29 Drawn By: Toan	

立创EDA