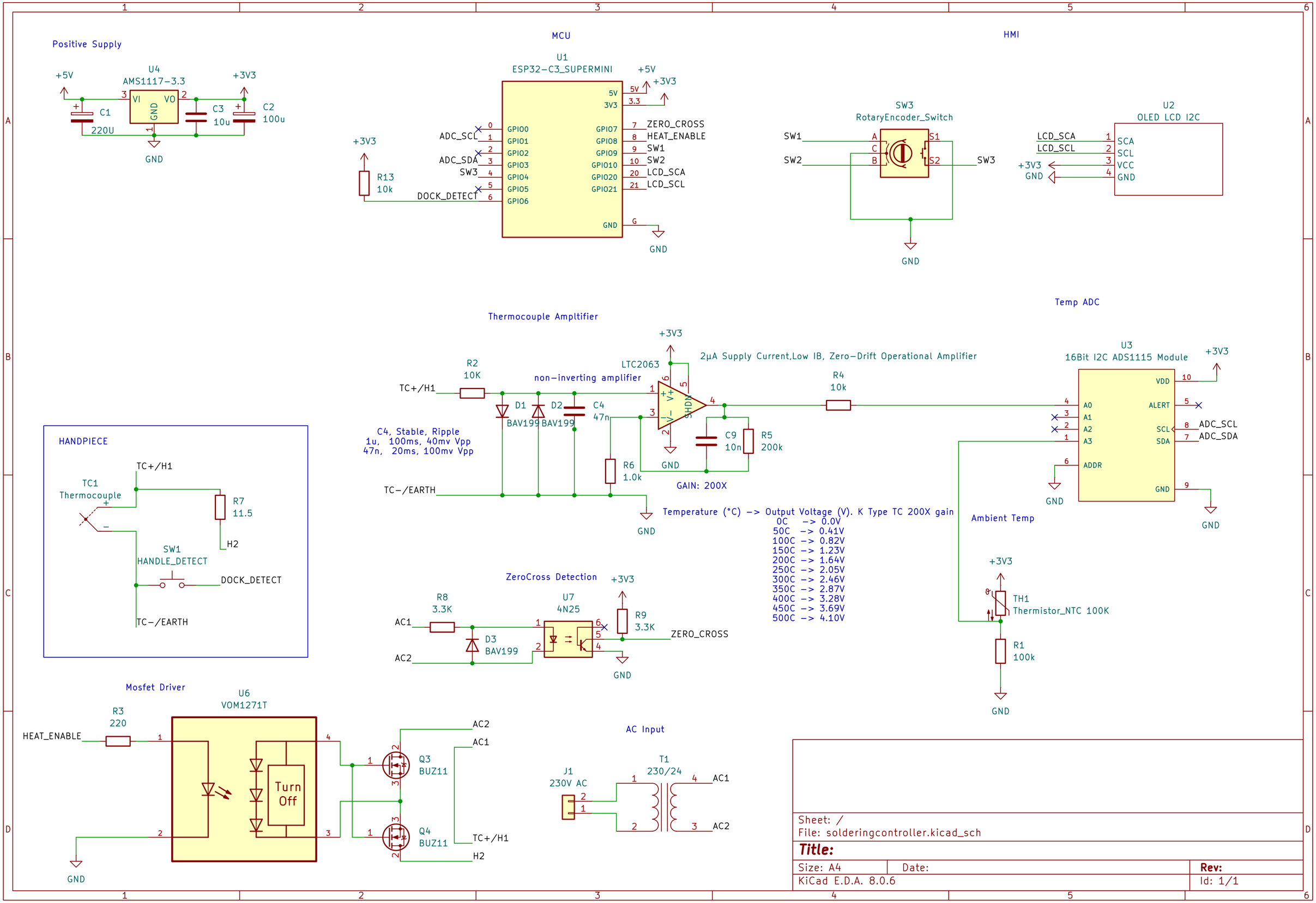
Positive Supply
U4
AMS1117-3.3
+5V
+3V3
VI
VO
GND
C1
220U
C3
10u
C2
100u
MCU
U1
ESP32-C3_SUPERMINI
5V
3V3
GPIO0
GPIO1
GPIO2
GPIO3
GPIO4
GPIO5
GPIO6
GPIO7
GPIO8
GPIO9
GPIO10
GPIO20
GPIO21
ADC_SCL
ADC_SDA
SW3
DOCK_DETECT
ZERO_CROSS
HEAT_ENABLE
SW1
SW2
LCD_SCA
LCD_SCL
R13
10k
HMI
SW3
RotaryEncoder_Switch
S1
S2
U2
OLED LCD I2C
SCA
SCL
VCC
Thermocouple Ampltifier
R2
10K
TC+/H1
TC-/EARTH
D1
D2
BAV199
C4
47n
non-inverting amplifier
C4, Stable, Ripple
1u, 100ms, 40mv Vpp
47n, 20ms, 100mv Vpp
LTC2063
2µA Supply Current,Low IB, Zero-Drift Operational Amplifier
SHDN
R6
1.0k
C9
10n
R5
200k
GAIN: 200X
R4
10k
Temperature (°C) -> Output Voltage (V). K Type TC 200X gain
0C -> 0.0V
50C -> 0.41V
100C -> 0.82V
150C -> 1.23V
200C -> 1.64V
250C -> 2.05V
300C -> 2.46V
350C -> 2.87V
400C -> 3.28V
450C -> 3.69V
500C -> 4.10V
Temp ADC
U3
16Bit I2C ADS1115 Module
VDD
ALERT
A0
A1
A2
A3
ADDR
Ambient Temp
TH1
Thermistor_NTC 100K
R1
100k
HANDPIECE
TC1
Thermocouple
R7
11.5
H2
SW1
HANDLE_DETECT
ZeroCross Detection
R8
3.3K
AC1
AC2
D3
BAV199
U7
4N25
R9
3.3K
Mosfet Driver
U6
VOM1271T
R3
220
Turn Off
Q3
BUZ11
Q4
BUZ11
AC Input
J1
230V AC
T1
230/24
Sheet: /
File: solderingcontroller.kicad_sch
Title:
Size: A4
Date:
Rev:
KiCad E.D.A. 8.0.6
Id: 1/1