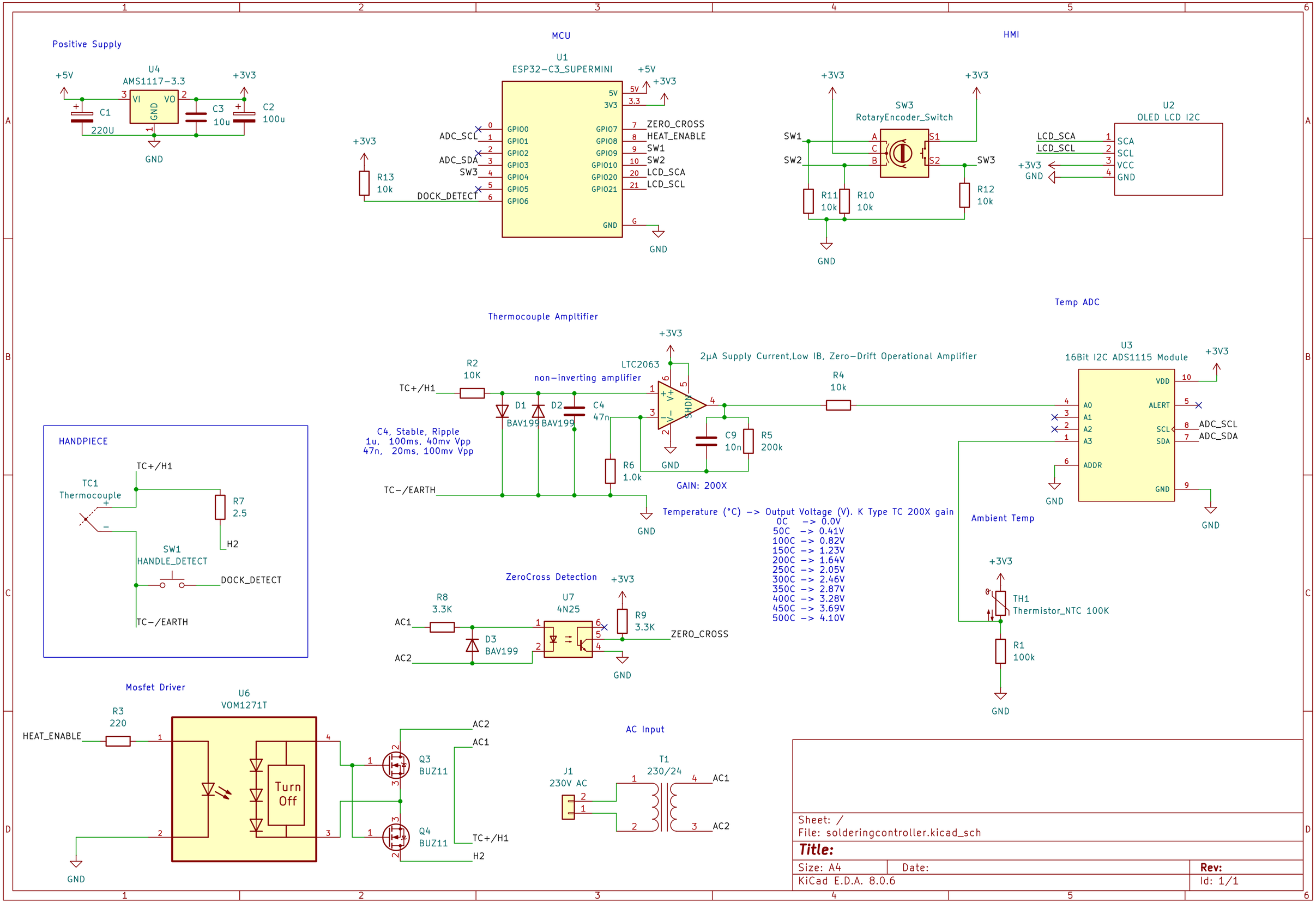
Positive Supply
U4
AMS1117-3.3
+5V
+3V3
C1
220U
C3
10u
C2
100u
GND
MCU
U1
ESP32-C3_SUPERMINI
ADC_SCL
ADC_SDA
SW3
DOCK_DETECT
R13
10k
ZERO_CROSS
HEAT_ENABLE
SW1
SW2
LCD_SCA
LCD_SCL
HMI
SW3
RotaryEncoder_Switch
R11
10k
R10
10k
R12
10k
U2
OLED LCD I2C
Thermocouple Ampltifier
LTC2063
2µA Supply Current,Low IB, Zero-Drift Operational Amplifier
R2
10K
non-inverting amplifier
D1
BAV199
D2
BAV199
C4
47n
R4
10k
C9
10n
R5
200k
R6
1.0k
GAIN: 200X
C4, Stable, Ripple
1u, 100ms, 40mv Vpp
47n, 20ms, 100mv Vpp
Temperature (°C) -> Output Voltage (V). K Type TC 200X gain
0C -> 0.0V
50C -> 0.41V
100C -> 0.82V
150C -> 1.23V
200C -> 1.64V
250C -> 2.05V
300C -> 2.46V
350C -> 2.87V
400C -> 3.28V
450C -> 3.69V
500C -> 4.10V
Temp ADC
U3
16Bit I2C ADS1115 Module
Ambient Temp
TH1
Thermistor_NTC 100K
R1
100k
HANDPIECE
TC1
Thermocouple
R7
2.5
SW1
HANDLE_DETECT
TC+/H1
TC-/EARTH
H2
ZeroCross Detection
U7
4N25
R8
3.3K
D3
BAV199
R9
3.3K
AC1
AC2
Mosfet Driver
U6
VOM1271T
R3
220
HEAT_ENABLE
Turn Off
Q3
BUZ11
Q4
BUZ11
AC Input
J1
230V AC
T1
230/24
Sheet: /
File: solderingcontroller.kicad_sch
Title:
Size: A4
Date:
Rev:
KiCad E.D.A. 8.0.6
Id: 1/1