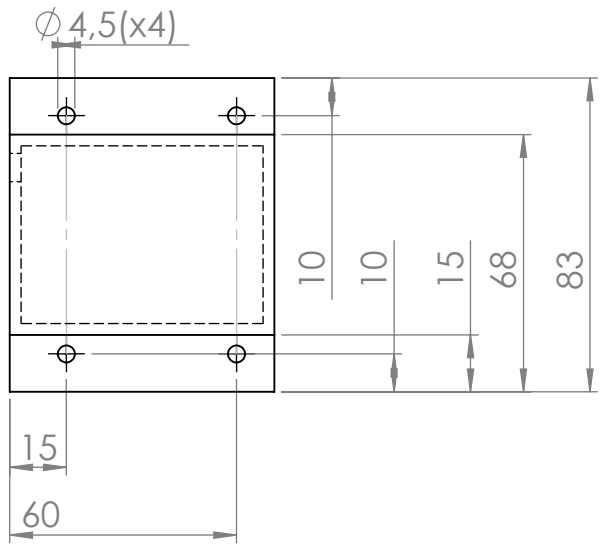

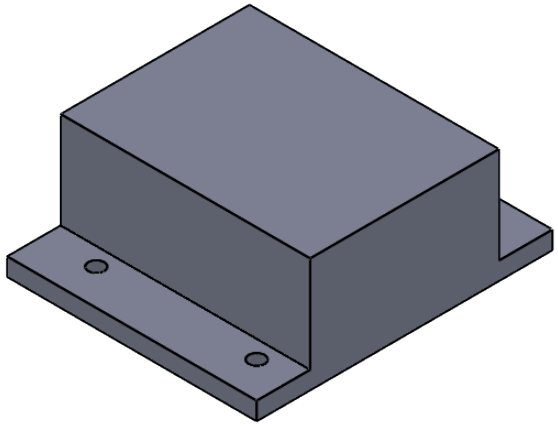

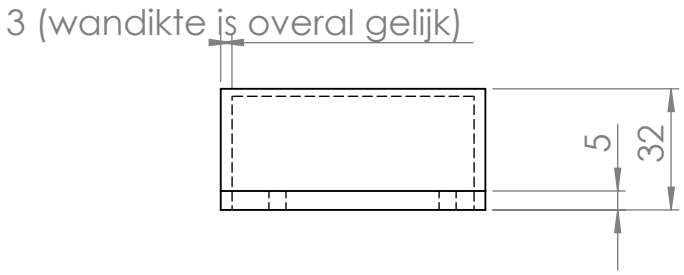

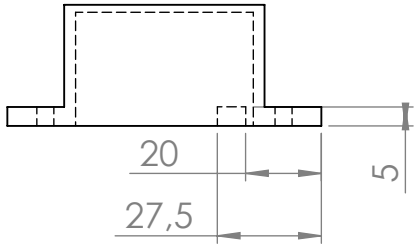

Am. Projection	DIMENSIONS IN MILLIMETERS	DEBUR AND BREAK SHARP EDGES TOLERANCES ACCORDING TO: ISO 2768-mK		Finish:	
				Material: PLA	
	Name / Signature / Date	SAXION		Description:	
Drawn:		Address: M.H. Tromplaan 28, 7513 AB Enschede, The Netherlands Postal address: P.O. Box 75000, 7500 KB Enschede, The Netherlands Phone: +31 53 4871111 Fax: +31 53 431 2233 Web: www.saxion.nl		Drawing number: Converter deel 1	Revision: / Format A4
Checked:					
Class:	StudentNo.			Weight: 104.08 grams	SCALE: 1:2 / SHEET: 1 OF 1

THIS DOCUMENT AND ALL INFORMATION AND DATA DISCLOSED HEREIN OR HEREWITH ARE THE CONFIDENTIAL AND PROPRIETARY PROPERTY OF SAXION AND ARE NOT TO BE USED, REPRODUCED OR DISCLOSED IN WHOLE OR IN PART BY OR TO ANYONE WITHOUT THE WRITTEN PERMISSION OF SAXION.

SOLIDWORKS Educational Product. For Instructional Use Only.