2022 International Conference on Recent Trends in Microelectronics, Automation, Computing and Communications Systems (ICMACC) | 978-1-6654-9604-9/22/$31.00 ©2022 IEEE | DOI: 10.1109/ICMACC54824.2022.10093540

A Journal on Cryptocurrency Analysis and Price Prediction Model using LSTM Neural Networks

Srinivasa Raghuram Daita
Department of ECE
SNIST
Hyderabad, India
raghuramds123@gmail.com

Shruti Bhargava Choubey
Department of ECE
SNIST
Hyderabad, India
shrutibhargava@sreenidhi.edu.in

Abhishek Choubey
Department of ECE
SNIST
Hyderabad, India
abhishek@sreenidhi.edu.in

***Abstract*– Cryptocurrency is a kind of virtual currency that came into existence with the recent advancement of technology in finance. It is used to complete transactions in a secure way by using the techniques of cryptography. This virtual currency is created with the help of block chain technology. In many countries, the transactions using cryptocurrency are not legalised by the banks. Some of the most popular cryptocurrencies are Bitcoin, Dogecoin, Litecoin, etc. The value of each cryptocurrency keeps varying from time to time. In this research paper, we build a data analytics model of the various cryptocurrency and also a machine learning model using the LSTM (Long Short-Term Memory) algorithm to forecast the value of a certain cryptocurrency on a particular day. This paper uses a web application called Yahoo Finance(yfinance) which has all the details of the live stock market and this acts as a source of dataset for this paper. Also, various python packages such as numpy, pandas, tensorflow, seaborn, matplotlib, etc. are used for building a model. The LSTM algorithm makes use of RNN (Recurrent Neural Network) which is powerful to model data sequencer because it has an internal memory state to store the past seen data. The proposed LSTM algorithm has a 98% accuracy which outperforms the accuracy of other existing models.**

Keywords*– *Cryptocurrency, LSTM (Long Short-Term Memory), Yahoo Finance, RNN (Recurrent Neural Network).

I. INTRODUCTION

Cryptocurrencies nowadays are the modern methods to exchange currency and also building a portfolio. Since the last decade, there has been a booming rise in the use and exchange of cryptocurrency. Although Bitcoin was introduced in the year 2008, in the year of 2017, the value of bitcoin grew rapidly as more and more people were interested in investing in cryptos. As of today, cryptocurrency market capitalisation has surpassed $2 trillion USD. Cryptography has evolved from being a niche industry to a monolith in no time. So has the technology to forecast the trend of a particular crypto has evolved. Time series forecasting using the deep learning models have become so accurate and research in this field to make the forecasting better is happening rapidly. Cryptocurrencies like Ethereum, Litecoin, Dogecoin, etc. have also come into the market place and prediction models which analyze the past data of these currencies and predicted trends have made it easy for investors to exchange cryptos.

II. LITERATURE SURVEY

Machine learning and artificial intelligence are used to forecast the future values based on historical input data. The authors of [1] have stated that the LSTM models offer several advantages over conventional forecasting models; research demonstrates that they provide outcomes that are almost or precisely the same as the actual outcome, and they also improve the accuracy of the predicted result. There are many cryptocurrencies available on virtual markets; however, Bitcoin is the most popular, and it is influenced by external factors such as social media, news, and other smaller cryptocurrencies with a smaller market cap that are not taken into account by investors and users when deciding which cryptocurrencies to invest in. The authors of [2] intend to say that the smaller cryptocurrencies that are not dominant in the market may affect the market of larger cryptocurrencies in a positive or a negative way. The authors of [3] proposed a method to predict the price of bitcoin on a particular day. Combined use of RNN and LSTM using machine learning algorithms can automate cryptocurrencies prediction by using the past data to predict the value in the future. In the process of decision making for investors to invest at appropriate time, risk is involved. For this, the authors of [4] build a hybrid model based on GRU and LSTM that predicts Litecoin very accurately. The authors of [5] made use of time sequential data and ML algorithms to predict the values of bitcoin. The authors of [6] and [9] used periodic sampled data based on past input samples and using the heterogeneous auto-regressive realised volatility (HARRV) model, future values are forecasted. The authors of [7] used logistic regression to make price predictions on bitcoin and got a model accuracy off 66%. Research on the implementation of block chain technology for cryptographic trend understanding and prediction was analysed by the authors of [8]. Meanwhile the authors of [10] have done a comparative study on the various gate inputs that can be given while we use GRU in a RNN. The authors of [11] have worked on risk optimised crypto

978-1-6654-9604-9/22/$31.00 ©2022 IEEE

Authorized licensed use limited to: Somaiya University. Downloaded on September 10,2025 at 07:26:08 UTC from IEEE Xplore. Restrictions apply.

investment methods to improve the market standard and build a better portfolio. The researchers of [12] have compared various machine learning algorithms to predict the trend of Bitcoin specifically. They have also achieved a Mean Square Error (MSE) to be very low, making the prediction lot precise. The authors of [13] have combined CNN and LSTM models to build Multiple-Inputs Cryptocurrency Deep Learning model (MiCDL) to forecast the crypto trends. They have used a multiple input crypto model where all the input layers are merged and the output is collected from a single dropout layer. By this, the prediction output was not accurate up to the mark. Research in this field of prediction is still going on to achieve high accuracy and precision.

III. PROPOSED METHODOLOGY

This proposed model is built to know the trend of the cryptocurrency over the period of time and using the LSTM algorithm, the model can predict the future values of cryptocurrency. This model has achieved better accuracy than the existing models. This model involves 5 steps: a) Collecting the past data b) Data processing for visualisation and analytics c) Splitting data into testing and training data d) Training the model with LSTM model e) Predicting the results.

The proposed block diagram is shown in fig.1.

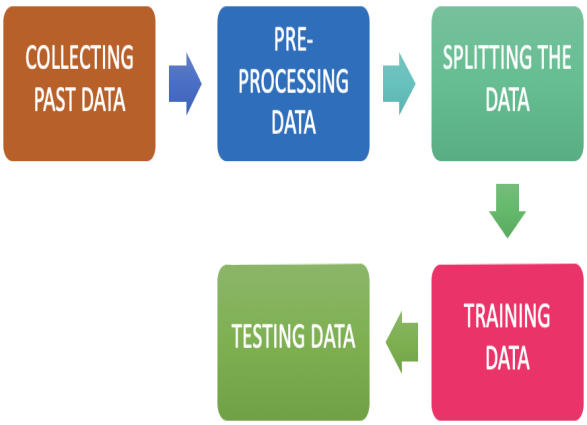

Fig.1 Block diagram of proposed method

A. *LSTM (Long Short-Term Memory):*

LSTM is a type of recurrent neural network which provides high accuracy while predicting the future. As we make use of the yahoo finance API, all our data for training and testing our model is gathered. The next step is to prepare the data for data modelling. For building proposed prediction model using the LSTM algorithm and implementing various neural network layers which build relations between the data of the dataset and we can predict the future values.

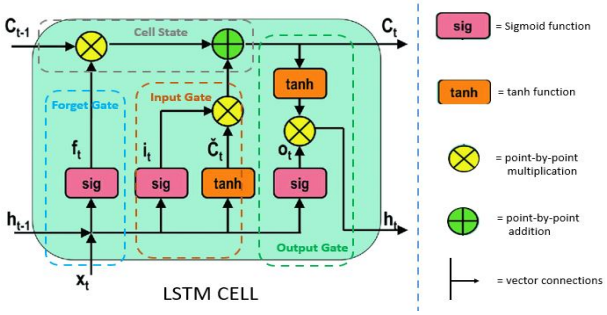

Fig.2 LSTM Cell Diagram

LSTM equations for one timestep:

$$f_t = \sigma_g\,(W_f \times x_t + U_f \times h_{t-1} + b_f)$$

$$i_t = \sigma_g\,(W_i \times x_t + U_i \times h_{t-1} + b_i)$$

$$o_t = \sigma_g\,(W_o \times x_t + U_o \times h_{t-1} + b_o)$$

$$c'_t = \sigma_c\,(W_c \times x_t + U_c \times h_{t-1} + b_c)$$

$$c_t = f_t \cdot c_{t-1} + i_t \cdot c'_t$$

$$h_t = o_t \cdot \sigma_c(c_t)$$

From fig.2, the LSTM cell contains an input gate(i_t), output gate(o_t)and a forget gate(f_t). The input x_t of the LSTM can be the output of a CNN or the input sequence itself. The inputs from the previous timestep LSTM are h_{t-1} and c_{t-1}. The output of the LSTM for this timestep is o_t. The LSTM also generates the c_t and h_t for the next time step LSTM to be consumed. In the input gate, sigmoid function and tanh function are multiplied point by point and are added before they enter the output gate. In the output gate, tanh function and sigmoid function are multiplied point to point before the information leaves the LSTM cell.

B. *DATASET:*

This is the processed dataset that we get after modifying the data from the yahoo finance.This model only deals with the closing values of each cryptocurrency at the end of each day. All the other rows are removed to predict the values only on the basis of the closing values or the 7-day moving averages and modifying the data frame of our dataset with the closing value of each cryptocurrency against the date.

Authorized licensed use limited to: Somaiya University. Downloaded on September 10,2025 at 07:26:08 UTC from IEEE Xplore. Restrictions apply.

```
In [10]: crypto[['BTC','ETH','DOGE','DASH','BNB']].head()
Out[10]:
```

Date	BTC	ETH	DOGE	DASH	BNB
2020-12-31	29001.720703	737.803406	0.004682	99.605362	37.376034
2021-01-01	29374.152344	730.367554	0.005685	88.241707	37.905010
2021-01-02	32127.267578	774.534973	0.010615	86.969772	38.241592
2021-01-03	32782.023438	975.507690	0.009771	89.069138	41.148979
2021-01-04	31971.914062	1040.233032	0.009767	88.797173	40.926353

```
In [11]: crypto[['BTC','ETH','DOGE','DASH','BNB']].tail()
Out[11]:
```

Date	BTC	ETH	DOGE	DASH	BNB
2021-12-30	47178.125000	3713.852051	0.171313	133.442505	518.909729
2021-12-31	46306.445312	3682.632812	0.170496	134.007797	511.708313
2022-01-01	47686.812500	3769.697021	0.173035	137.953934	527.352722
2022-01-02	47345.218750	3829.564941	0.174403	142.062637	531.396667
2022-01-04	46221.355469	3743.961914	0.169560	137.987778	508.861847

Fig .3 . Data-frame representing values of various crypto within a specific time frame

From fig.3, using pandas functions such as head and tail, the closing values of various currencies are valued against the dates.

IV. RESULTS

A. Visual Analysis:

Fig.4 shows the values of various cryptocurrencies over a period of time. The legend on the right side shows the various cryptocurrencies and the plot shows their trend along the period of time. In fig.4, matlab plot is used to represent the data.

```
crypto[['BTC','ETH','DOGE','DASH','BNB']].plot(figsize = (10,10))
Out[13]: <AxesSubplot:xlabel='Date'>
```

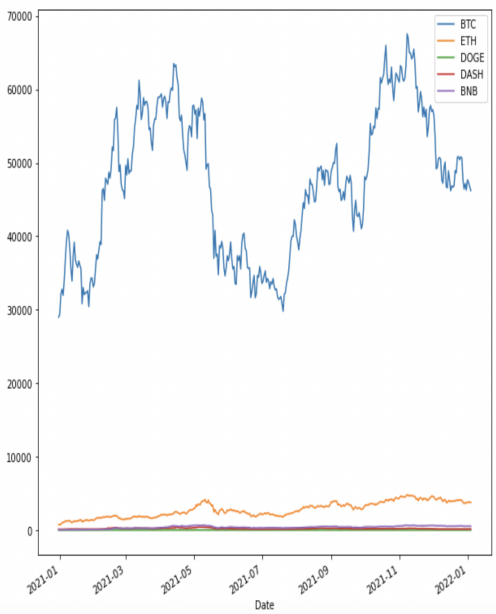

Fig.4 Closing value vs Date of the various cryptocurrencies

Based on fig.4, bitcoin stands out to be the most invested cryptocurrency with a highest value of $65767 and next comes Ethereum. Fig.5 shows how accurate the prediction price of the cryptocurrency is after training the model. The black line indicates the actual price of the currency and the green line shows the price that is predicted by proposed model.

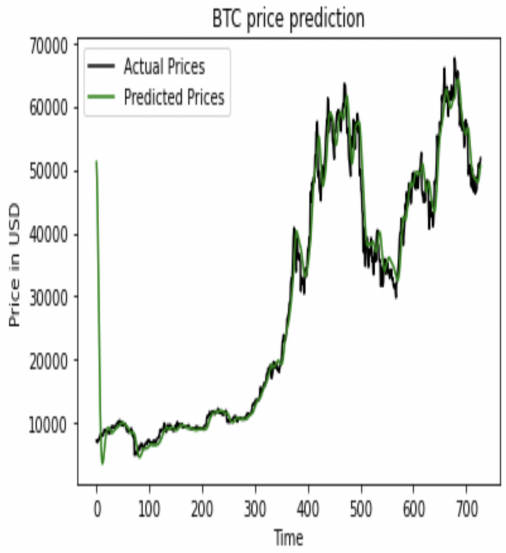

Fig. 5. Predicted price vs actual price of proposed model.

Fig.6 shows the correlation heat-map of the various values of our dataset.

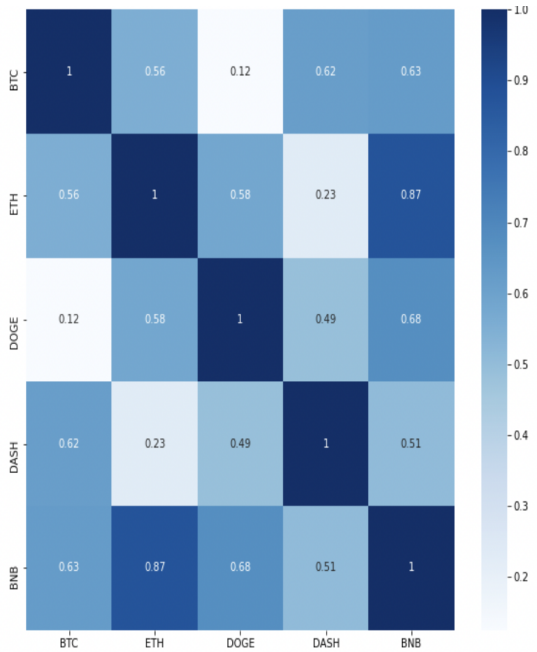

Fig. 6 Correlation Heat-map

Fig. 6 is a comparison between the various cryptos most used by the investors. From fig.6, one can conclude that the value of ETH is 0.56 times that of BTC.

Authorized licensed use limited to: Somaiya University. Downloaded on September 10,2025 at 07:26:08 UTC from IEEE Xplore. Restrictions apply.

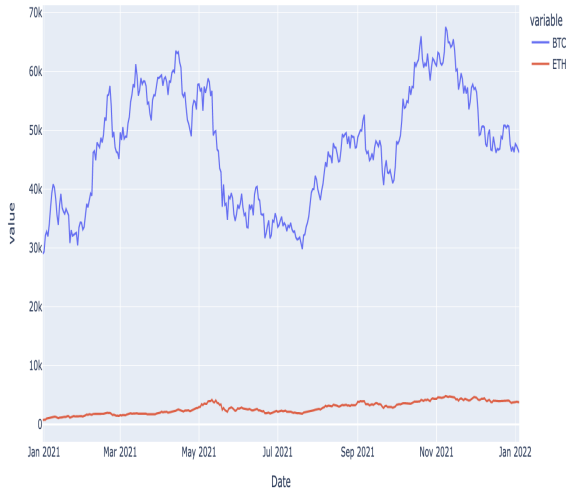

Fig.7 Comparison between the top 2 cryptocurrencies

From the fig.7, it is evident that Bitcoin and Ethereum are the most traded cryptos and one can compare the value of BTC and ETH based on the date and month.

A. Statistical Analysis:

The Multiple-Input Cryptocurrency Deep learning model is a combination of CNN and LSTM together. In this model, multiple input layers are combined and the output is only collected through one layer. As observed from table.1, the model only achieved an accuracy of 53.04% and has a high RMSE and MAE (Mean Absolute Error) value.

Table.I MiCDL Result values

Model	Accuracy	MSE	RMSE	MAE
MiCDL [13]	53.04%	0.0952	257.728	170.761

Comparative research on which ML algorithm is the best suitable for forecasting the values of cryptocurrencies [12]. From table.2, we can conclude that the logistic regression and SVM have better forecasting ability compared to other existing ML algorithms.

Table.II Comparison between various ML Algorithms [12],[13]

Model	Accuracy	Precision	Recall
LR (Logistic Regression) [12]	66%	72.3%	35%
RF (Random Forest) [12]	51%	49.3%	49.3%
SVM (Support Vector Machine) [12]	65.3%	70.8%	35.4%
XGBoost [12]	48.3%	45.5%	35.2%

From table.3, it is very evident that our proposed model (LSTM) has the highest accuracy of 98% which makes it better than all the previous models. Also, the value of RMSE is 0.26 which means that the model is accurate at its forecasting. Also, MAPE, MSE, MAE values are 1.122%, 0.0025, 0.0501 respectively indicating that the model is an accurate model.

Table.III Comparative results of Proposed model and existing models

Model	Accuracy	Precision	Recall	MAPE	MSE	RMSE	MAE
LSTM	98%	96.4%	95.2%	1.122 %	0.0025	0.2618	0.0501
Bi-LSTM	53.47 %	42.2%	45.6%	2.387 %	3.887	0.511	0.1207
GRU	85.55 %	83.17 %	83.29 %	1.151 %	51	0.324	0.0891

V. CONCLUSION AND FUTURE SCOPE

The model proposed provides an accuracy of 98% compared to any other existing models and can help us to predict the price of cryptocurrency using LSTM and yahoo finance. Despite the accuracy, one can't entirely rely on this model for investments as the stock market keeps varying from time to time and may be risky. In the future, adding denser, dropout and LSTM layers can make this model more accurate. The main purpose of using this algorithm is because it provides best prediction results for time series problems. LSTM also has a drawback that is the time and memory consumed to train the model is very high and data can easily get over fit. To make the predictions even better, research on the LSTM model to improve its performance can be done.

VI. REFERENCES

[1] Hamayel, M.J.; Owda, A.Y. A Novel Cryptocurrency Price Prediction Model Using GRU, LSTM and bi-LSTM Machine Learning Algorithms. AI 2021, 2, 477–496.

[2] Hamayel, M.J.; Owda, A.Y. A Novel Cryptocurrency Price Prediction Model Using GRU, LSTM and bi-LSTM Machine Learning Algorithms. AI 2021, 2, 477–496.

[3] S. Hochreiter and J. Schmidhuber, “Long short-term memory,” Neural Comput., vol. 9, no. 8, pp. 1735–1780, 1997..

[4] Patel, M.M.; Tanwar, S.; Gupta, R.; Kumar, N. A Deep Learning-based Cryptocurrency Price Prediction Scheme for Financial Institutions. J. Inf. Secur. Appl. 2020, 55, 102583.

[5] Derbentsev, V.; Babenko, V.; Khrustalev, K.; Obruch, H.; Khrustalova, S. Comparative Performance of Machine Learning Ensemble Algorithms for Forecasting Cryptocurrency Prices. Int. J. Eng. Trans. A Basics 2021, 34, 140–148. [CrossRef]

[6] Miura, R.; Pichl, L.; Kaizoji, T. Artificial Neural Networks for Realized Volatility Prediction in Cryptocurrency Time Series. In Advances in Neural Networks—ISNN 2019; Lu, H., Tang, H., Wang, Z., Eds.; Lecture Notes in Computer Science; Springer: Cham, Switzerland, 2019; Volume 11554.

Authorized licensed use limited to: Somaiya University. Downloaded on September 10,2025 at 07:26:08 UTC from IEEE Xplore. Restrictions apply.

[7] Chen, Z.; Li, C.; Sun, W. Bitcoin price prediction using machine learning: An approach to sample dimension engineering. J. Comput. Appl. Math. 2019, 365, 112395. [CrossRef]
[8] Adams, R.; Kewell, B.; Parry, G. Blockchain for Good? Digital Ledger Technology and Sustainable Development Goals. In
[9] Handbook of Sustainability and Social Science Research; Filho, W.L., Marans, R., Callewaert, J., Eds.; World Sustainability Series;
[10] Springer: Cham, Switzerland, 2018. [CrossRef]
[11] Wu, C.-H.; Lu, C.-C.; Ma, Y.-F.; Lu, R.-S. A New Forecasting Framework for Bitcoin Price with LSTM. In Proceedings of the IEEE
[12] International Conference on Data Mining Workshops (ICDMW), Singapore, 17–20 November 2018; pp. 168–175. [CrossRef]
[13] Dey, R.; Salemt, F.M. Gate-variants of Gated Recurrent Unit (GRU) neural networks. In Proceedings of the IEEE 60th International
[14] Midwest Symposium on Circuits and Systems (MWSCAS), Boston, MA, USA, 6–9 August 2017. [CrossRef]
[15] Trimborn, S., Li, M. and H ̈ardle, W. (2017). Investing with cryptocurrencies - a liquidity constrained investment approach, SFB 649 Discussion Paper (2017-014).
[16] Phaladisailoed T, Numnonda T (2018) Machine learning models comparison for bitcoin price prediction. In: 2018 10th international conference on information technology and electrical engineering (ICITEE). IEEE, pp 506–511.
[17] Livieris, I.E.; Stavroyiannis, S.; Pintelas, E.; Kotsilieris, T.; Pintelas, P. A dropout weight-constrained recurrent neural network model for forecasting the price of major cryptocurrencies and CCi30 index. *Evol. Syst.* **2020**.

Authorized licensed use limited to: Somaiya University. Downloaded on September 10,2025 at 07:26:08 UTC from IEEE Xplore. Restrictions apply.