2021 2nd Global Conference for Advancement in Technology (GCAT)
Bangalore, India. Oct 1-3, 2021

Stock Market Prediction Using RNN LSTM

*

Priyanka Srivastava
Dept. of Computer Science
Banaras Hindu University
Varanasi, India
priyankasrivastava658@gmail.com

P K Mishra
Dept. of Computer Science
Banaras Hindu University
Varanasi,India
mishra@bhu.ac.in

2021 2nd Global Conference for Advancement in Technology (GCAT) | 978-1-6654-1836-2/21/$31.00 ©2021 IEEE | DOI: 10.1109/GCAT52182.2021.9587540

***Abstract*—Bond price prediction is a trendy, demanding, hard and complicated problem in the realm of computation that usually includes considerable interaction between people and computers. The trends for predicting stock market physical aspects versus physiological, rational, and illogical conduct, investor emotion, market whispers are engaged in various factors. All those facets mix to make stock values extremely sophisticated and exceedingly difficult to accurately anticipate. [15] Because of the linked nature of stock prices, sequential prediction algorithms may be used for stock market prediction efficiently. ML methods can identify patterns and determine the logic and forecasts and can be utilized to produce unerringly correct predictions. [8] We have explored several different algorithms to forecast the stock market from simple algorithms, such as Simple Average, Linear regression, to advance algorithms like ARIMA, LSTM, and compare what gives us a more accurate result and works more efficiently. We offer a research technology that employs the improved Long Short Term Memory (LSTM) version of RNN, with stochastic gradient descent maintaining the weights for each data variable. [8] To help us deliver more efficient and accurate outcomes than existing stock price prediction systems. We have utilized the TSLA dataset to create the stock prediction model: this is TESLA Inc. from Yahoo Finance. We have analyzed future stock prices using data-frame closing prices, built up and trained the LSTM model, and have taken a data set sample to generate stock forecasts and computed additional RMSE for correctness and effectiveness. We have also displayed several algorithms for comparative predictions, Based on these outcomes, LSTM is recommended for stock market forecasts.**

***Index Terms*—Long Short Term Memory, Machine Learning, Recurrent Neural Network , Stock Market Prediction.**

I. Introduction

The stock market has always been highlighted and demanding for stock traders. It is a huge pool of investors and stock traders that purchase and sell stocks, which cause constant change to stock prices, push up or return. The ultimate goal of stock purchasing is the purchase of stocks by companies whose value is expected to rise (i.e. share price). A proper inventory prediction might lead to the seller and broker benefit. It is often claimed that stock forecast is not a random but a chaotic process, showing that the history of the particular stock market may be carefully analyzed.

Machine Learning is an effective and dependable method for these operations. It allows stock production to approximate market value to tangible value and therefore improves model precision. Because of its effective and accurate measures, machine training was initiated and driven by various study activities in the field of inventory prediction.

Machine Learning's most essential element is the dataset utilized to predict stock markets. The data set to be utilized must be as tangible as possible since tiny changes in the dataset might lead to large results changes and efficient and precise assessments of the model. Supervised machine learning is used in this research on datasets. The data set has five parameters: Open, Close, Low, and High are different bid prices with very similar names. And the volume variable is the number of shares moved from one shareholder to the other during a period of time. The model is then evaluated on the test data.

Finance and inventory pricing depend largely on stock market assumptions. The forecast of stock prices on physical assets is a very difficult assignment due to the number of components that play a major influence on equity prices. Share values do not change or decrease in isolation, because the deflection in one stock tends to impact many other market inventory prices.

Many traditional machine learning proposals like support vector machines; variant decision trees, k-nearest neighbors, and ANN have been suggested for stock market prediction. These algorithms are powerful in many problems but in such highly volatile and non-linear problems, they suffer from stability issues. Deep learning has proved itself a promising such environments and showed good performance.[2]

We offer in this study an LSTM model for stock ket projections. We have explored several different algorithms for comparisons. LSTM contributes to long-term data and outcomes recording. The LSTM model may provide good predictions with low error rates, as indicated in the results section. Finally, figures demonstrating price variations throughout the years and between the expected prices are made up (for the LSTM model). The remainder of the paper is arranged accordingly. Chapter 2 offers a rapid examination of important literature. LSTM architecture, methodology used and the algorithm is discussed in chapter 3, our implementation and walkthrough of our model has been discussed in detail in chapter 4, chapter 5, presents our evaluated results and further references are mentioned.

Authorized licensed use limited to: Somaiya University. Downloaded on September 10,2025 at 05:07:07 UTC from IEEE Xplore. Restrictions apply.

II. Related Works

The objective of our related study was to investigate algorithms that might function on stock price data in real-time. These included related networks using the LSTM model[8], Deep Neural Network Ensemble[18], evolution and stock market prediction method. [16] Supporting vector machines were designed to construct and forecast a regression model using stock historical data. [10]

Particle swarm optimization technique is developed for controlled support vector machine parameters and variables which may actively forecast stock market trends. [12]LSTM was linked with the Bayesian naïve technique for analyzing variables in the market to increase prediction accuracy. [10] This approach may be used to forecast stock markets using additional factors in completely other time frames.

In combination with the LSTM time series sequential model, an emotional analysis technique was designed to assess a robust and dependable time series model for forecasting stock openness and the results helped to improve stock prediction accuracy. [21] In addition, the evolutionary approach for predicting the shifting patterns in stock market value has been applied. [16]

For stock market value prediction a deep belief network with intrinsic flexibility has been established. [10] ARIMA time series survey[19] has been carried out to forecast our model's trend and accuracy. Training long short-term memory with sparse grain dientDescent[20] was used on the model to forecast the stock market trend.

A breakthrough neural network has been created to forecast stock market value. [7] To accomplish a shift in future stock market values, a future model of neural network multilayer has been built with a hybrid method that incorporates fundamental characteristics of analysis and technical analysis in stock market indicators and the BP algorithm[1]. The outcome of the model showed that the hybrid methodology is more precise than the technique of analysis. We have therefore provided a highly recurrent LSTM-based neural network model with past inventories and a closing forecast of prices based on opening price, lowest price, and a maximum inventory price on the following day. [5]

Motivated by the above research, since some variables and parameters of stock are related, it is important to devise a recurrent neural network model that can address these variables and parameters simultaneously with the numerous prices of the same stock and results and helps us to achieve the accuracy of the model.

A. Objective

The major goal of this study is to accurately anticipate and analyze the stock market utilizing performance measurements. This study may be utilized to minimize the mistake and to improve the accuracy of future stock market prices. Further, it increases investors' possibilities of predicting stock prices at a lower mistake rate and greater precision, therefore making gains in share markets. After we gain an overview of different stock market forecasting methods, we can realize that we receive more accurate outcomes utilizing which approaches. Then we can decrease the number of mistakes investors might make in stock at the correct moment for their important money.

III. LSTM Architecture

The outcomes of a model are rarely the product of a regular neural network, but in reality, our results depend in many instances not only on external results but also on previous ones. For instance, the knowledge of each topic when a person tries to study relies not only on the continuous list of contexts but also on the understanding of a previous subject or the context that is understood by past subjects. When you read the story, you comprehend every word based on previous words.

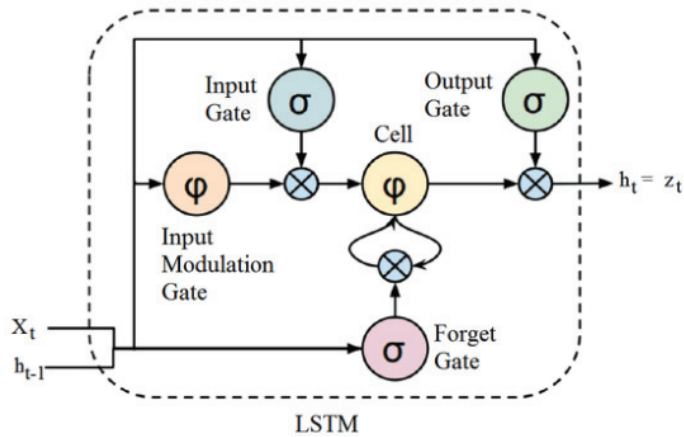

Fig. 1. LSTM Memory Cell [8].

The absence of context-based reasoning is a fundamental drawback of the conventional neural network. To eradicate this restriction, RNN is examined. RNN are interconnected with feedback loops to let information survive and comprise the next gates in a memory cell:

- Forget gate: Forget Gate governs when fresh information is to be replaced by certain parts of the cell state. If the output values are 0, then this should be disregarded, and close to 1 should continue for sections of the cell state.
- Input gate: Input gate in this area of input network analysis (i.e. previous output o(t-1), input x(t), and previous cell state c(t-1) are the circumstances under which cell information is kept or updated cell state. .
- Output Gate: Output Gate is based on the input state and the cell state, this cell section chooses which information is transferred to the next point in the network.

The LSTM network also serves to dynamically manage the degree of knowledge of historical variations in stock price movements, so that future developments in stock prices changes are more accurate.

LSTM's primary benefit is that it enables the reduced gradient problem to be solved – as the information in a memory cell is not repeatedly updated, the gradient does not decrease when the backpropagation is adjusted. The principal purpose

Authorized licensed use limited to: Somaiya University. Downloaded on September 10,2025 at 05:07:07 UTC from IEEE Xplore. Restrictions apply.

of LSTM is to recognize sequential time series context-specific dependency.

Each LSTM unit keeps informativeness for either extended or short periods without using the activation function that resides inside a recurring neural network efficiently. An important point to emphasize and note that any cell status in LSTM is multiplied by the outcome of the forgotten portal that tends to range from 0 to 1, thus we can infer that forgetting the gate in LSTM cells is both responsible for weight and the activation function of the cell. Thus, retained values can spread over an unaltered cell rather than exponentially decreasing at each sequence stage, weights can converge to their absolute value in the optimal period of time.

A. Methodolgy

LSTM is the upgraded version of Recurrent-Neural network (RNN) where prior-state information is retained. They differ from RNNs, as they incorporate long-term dependencies, and RNNs seek for the link between previous and current data. This means that the intermediate information for LSTM is comparatively lesser. The main objective of using this model in stock model prediction is because forecasts depend on copious data and are generally based on the long-term previous values of stocks.

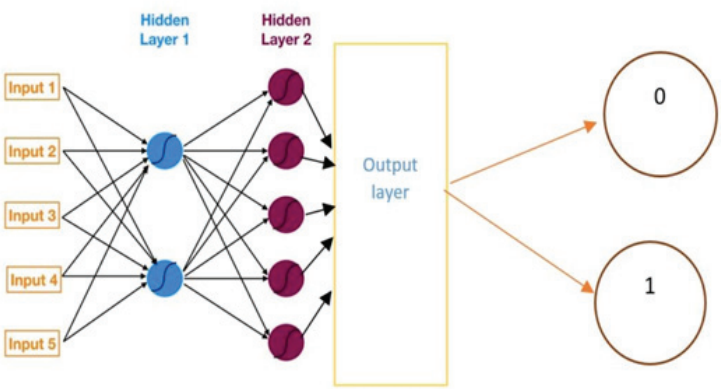

Fig. 2. A Neural Network with Two Hidden Layers.

Therefore, LSTM monitors mistake by offering RNN support through persistent information on predictions that are more correct. As stock market is evaluated by the processing of enormous amounts of data, the weight matrix slope might thus be quite tiny and can limit the model's learning rate.

This correlate with the problem of dissipating gradient,LSTM avoids this from happening. The cell recalls the long-term propagation value and the gate governs the retention values.

B. Terminologies Used

- Test set: This is a subset of the original data set utilised for estimating the output value, which is subsequently assessed to measure the effectiveness of the applied model.
- Validation Set: This is part of the original dataset used to compare neural network model variables.
- Activation function: Defines network node output as a weighted input sum.
  The activation functions sigmoid and ReLU (rectified linear unit) have here been introduced to optimise the prediction model.
  a. Sigmoid –The definition of this limited, differentiable, real function for all true input values is non-negative and has an exact one point of tension at each point and the following formula.:
  $$y = 1/(1 + e^{-x}) \tag{1}$$
  b. ReLU – It is a linear function in part which will directly generate the input if it is positive, otherwise it will generate zero and have the following formula:
  $$y = max(0, x) \tag{2}$$
- Batch size : It is number of samples that should be model before changing the weight of the dataset variables. .
- Epoch : It is a full crossover by the training algorithm of the provided data set.
- Dropout: It is a technique that ignores randomly chosen neurons. Therefore, their contribution to reverse neuron activity is temporarily eliminated on the reverse side pass, and no weight updates on the reverse side of the neuron are performed.
- Cost Function: This is a sum of lost functions throughout the workout. One example is the Mean Squared Error that is mathematically defined as follows :
  $$MSE = \sum N_i = \frac{(f(x_i) - y_i)^2}{N} \tag{3}$$
- Root Mean Square Error (RMSE): The discrepancy between the predicted values of a model and those actually observed is quantified. The squares between the forecast value and the actual value are computed and divided by the sample number. It is represented mathematically as follows:
  $$RMSE = \sqrt{\frac{\sum_i^N (Predicted - Actual)^2}{N}} \tag{4}$$
  In general, smaller the RMSE value, greater the accuracy of the prediction made.

C. Algorithm

LSTM Stock Market Prediction Algorithm:
Input: Historical data of stock price.
Output: Prediction for stock prices on stock price variation.
1. Start
2. Data of Stock Values are saved in mutable array of 3 proportions
(X,Y,Z) where:
   - *X is number of workout sequences.*
   - *Y is sequence length*
   - *Z is count of attributes of an individual series.*

Authorized licensed use limited to: Somaiya University. Downloaded on September 10,2025 at 05:07:07 UTC from IEEE Xplore. Restrictions apply.

2. Train the built-in data network.
3. In the following stage use the output of the last layer as the forecast.
4. Repeat steps 2 and 3 until you reach the optimum output.
5. Get forecasts through the provision of test data as network input.
6. Assess accuracy by comparing forecasts with current data.

IV. IMPLEMENTATION

Following key components is the stock prediction system. A short summary of each component is provided below:

A. Dataset Collection

Historical stock market data set for end-of-day, i,e, close-in Price of several businesses from stock databases has been collected. Kaggle.com,Yahoo !Finance.com are only few of the several websites that collect data from model prediction, for example Tesla's research, inc. inventory prices were utilised for studies collected from Yahoo!Finance.com, particularly TSLA.csv files, The data gathered included five characteristics:

1.1. Date: Date of the observation specific day of the stock.
1.2. Price of opening: the very first stock price during the day.
1.3. High: Intra-day maximum stock price attained.
1.4. Low: Intra-day minimum inventory price.
1.5. Volume: Number of inventories or transactions bought and sold during the day on the market.
1.6. Adj. Close: This refers to the amount of future market shares. The aforementioned data are transformed into a format that with our prediction model is appropriate for use by following steps:
1.7. Transformation of time series data for supervised learning to input-output components.
1.8. Scale the data to the range [-1,+1].

B. Prediction Model

The input data are initially divided up into test and training data sets, and the training data set is equipped with a further LSTM model, and the equipment's proximity to the test data set is examined. LSTM is formed using an input layer of 5 neurons, an 'n' hidden layer of 'm' LSTM cells per layer, and an output layer of 1 neuron. Using the validation system, the model must be mounted for absolute physical variables such as the number of hidden layers n, the number of neurons 'm' per hidden layer, the batch size, etc.

V. RESULTS

In the following projects, the stock market system forecast may be further enhanced and innovated utilising much more data than the present one. This would help to improve the accuracy of our prediction models.

RMSE and Plot Trends show that the LSTM model is very accurate in forecasting stock markets between all algorithms and that further conclusions can be derived from Table 1.

The table I shows algorithms used and thier calculated RMSE Vlues respectively.

Algorithms	RMSE Values
Moving Average	6077.708
Linear Regression	51.996
ARIMA	96.5
LSTM	18.899

TABLE I
TABLE FOR RMSE VALUES

A. Plots of different analysed Algorithms:

In this work we have anaysed four algorthims and plotted grapgs and calculted RMSE values for accuracy and better performance and prediction trend can be seen in graphs.

- Actual graph of TSLA stocks:

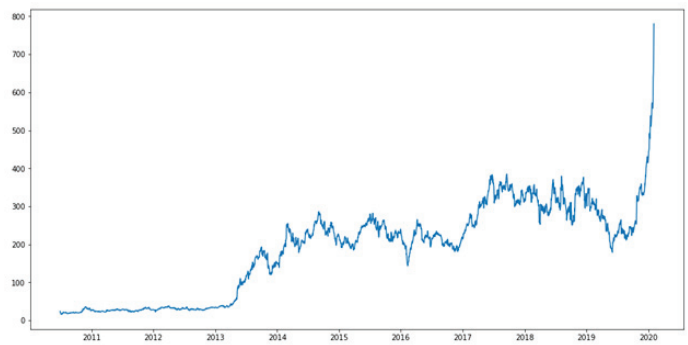

Fig. 3. Plot between Actual Trend of TESLA Stocks.

- **Moving Average:**

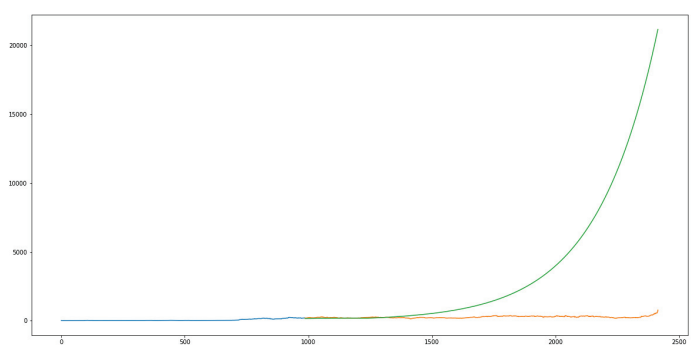

Fig. 4. Plot between Predicted Trend of TESLA Stocks (Moving Avg.)

- **Linear Regression:**
- **ARIMA:**
- **LSTM**

REFERENCES

[1] Adebiyi AA, Ayo KC, Adebiyi MO, Otokiti SO (2012) Stock price prediction using neural network with hybridized market indicators. J Emerg Trends Comput Inf Sci 1(3):1–9

Authorized licensed use limited to: Somaiya University. Downloaded on September 10,2025 at 05:07:07 UTC from IEEE Xplore. Restrictions apply.

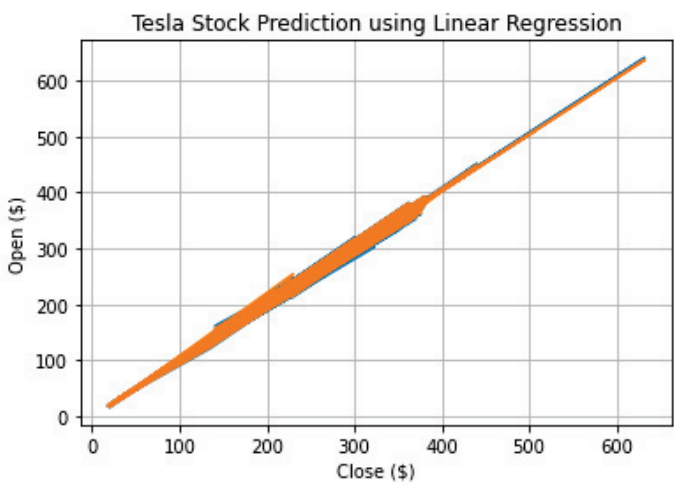

Fig. 5. Plot between Predicted Trend of TESLA Stocks (Linear Reg.)

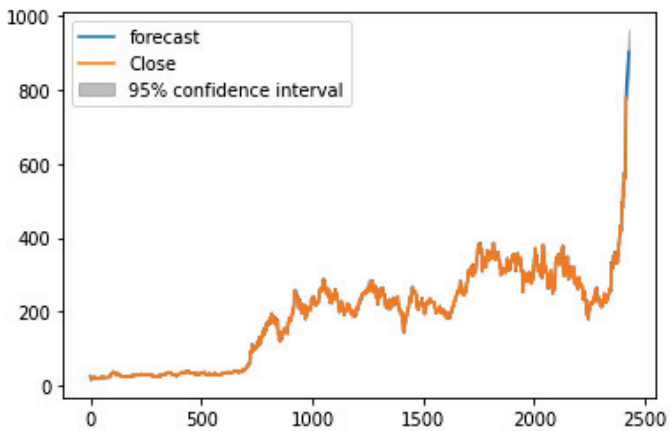

Fig. 6. Plot between Predicted Trend of TESLA Stocks (ARIMA).

Fig. 7. Plot between Predicted Trend of TESLA Stocks (LSTM).

[2] Akita, R., Yoshihara, A., Matsubara, T. Uehara, K. (2016). Deep learning for stock prediction using numerical and textual information. IEEE, Computer and Information Science (ICIS).

[3] Billah M, Waheed S, Hanifa A (2015) Predicting closing stock price using artificial neural network and adaptive neuro fuzzy inference system: the case of the dhaka exchange. Int J Comput Appl 11(129):975–8887

[4] B. Mendelsohn Louis, "Trend Forecasting with Technical Analysis: Unleashing the Hidden Power of Intermarket Analysis to Beat the Market" in Marketplace Books, 2000.

[5] Ding, G., Qin, L. Study on the prediction of stock price based on the associated network model of LSTM. Int. J. Mach. Learn. Cyber. 11, 1307–1317 (2020).

[6] G. C. Lane and C. Lane, "Getting Started with Stochastics" in Technical Analysis of Stocks and Commodities, 1984.

[7] Gudelek MU, Boluk SA, Ozbayoglu M (2017) A deep learning based stock trading model with 2-D CNN trend detection. In: IEEE: 2017 IEEE symposium series on computational intelligence (SSCI), pp 1–8

[8] Jaspreet Kaur Thethi, Aditi Pandit, Hitakshi Patel, Vaishali Shirsath, 2021, Stock Market Prediction and Portfolio Management using ML techniques, INTERNATIONAL JOURNAL OF ENGINEERING RESEARCH TECHNOLOGY (IJERT) NTASU – 2020 (Volume 09 – Issue 03),

[9] Li J, Bu H, Wu J (2017) Sentiment-aware stock market prediction: a deep learning method. In: IEEE: 2017 international conference on service systems and service management, pp 1–6

[10] Li X, Yang L, Xue F, Zhou H (2017) Time series prediction of stock price using deep belief networks with Intrinsic plasticity. In: IEEE: 2017 29th Chinese Control and Decision Conference (CCDC), pp 1237–1242

[11] Raghav Nandakumar, Uttamraj K R, Vishal R, Y V Lokeswari,2021, Stock Market Prediction a using LSTM, INTERNATIONAL JOURNAL OF ENGINEERING RESEARCH TECHNOLOGY (IJERT) NTASU – 2018(Volume 05 – Issue 03),

[12] Sands TM, Tayal D, Morris ME, Monteiro ST (2015) Robust stock value prediction using support vector machines with particle swarm optimization. Congress on Evolutionary Computation (CEC), pp 3327–3331

[13] S. E. Gao, B. S. Lin and C. Wang, "Share Price Trend Prediction Using CRNN with LSTM Structure," 2018 International Symposium on Computer, Consumer and Control (IS3C), 2018, pp. 10-13, doi: 10.1109/IS3C.2018.00012.

[14] S. Hochreiter and J. Schmidhuber, "Long short-term memory", Neural computation, vol. 9, pp. 1735-1780, 1997.

[15] Stock Price Prediction Using LSTM on Indian Share Market , Vol 63,2019,

[16] Tsai Y-C, Hong C-Y (2017) The application of evolutionary approach for stock trend awareness. In: IEEE: IEEE 8th international conference on awareness science and technology (iCAST), pp 306–311

[17] Xia Y, Liu Y, Chen Z (2013) Support vector regression for prediction of stock trend. 6th Int Conf Inf Manag Innov Manag Ind Eng (ICIII) 2:123–126

[18] Yang B, Gong Z-J, Yang W (2017) Stock market index prediction using deep neural network ensemble. In: 36th Chinese Control Conference (CCC), pp 3882–3887

[19] Z. A. Farhath, B. Arputhamary and L. Arockiam, "A Survey on ARIMA Forecasting Using Time Series Model," Int. J. Comput. Sci. Mobile Comput, vol. 5, pp. 104-109, 2016.

[20] Zhu, Maohua, et al. "Training Long Short-Term Memory With Sparsified Stochastic Gradient Descent." (2016)

[21] Zhuge Q, Xu L, Zhang G (2017) LSTM neural network with emotional analysis for prediction of stock price. Eng Lett 2(25):167–175

Authorized licensed use limited to: Somaiya University. Downloaded on September 10,2025 at 05:07:07 UTC from IEEE Xplore. Restrictions apply.