15.6 A 36GB 3.3TB/s HBM4 DRAM with Per-Channel TSV RDQS Auto Calibration and Fully-Programmable MBIST

Sunghwan Joo, Jinyeon Kim, Yongsun Lee, Ji-Young Kim, Youngsik Lee, Yong-Min Kim, ChiSung Oh, Kyu-Ha Shim, Haesuk Lee, Young-Yong Byun, ChangHyun Bae, Joohwan Kim, Je-Min Ryu, Shin-haeng Kang, Jaehoon Lee, Young-Uk Chang, JaeKyung Lee, JongTae Hwang, Daehwan Seo, Ki-Heon Na, Young Guen Song, Daihyun Lim, Kyung-Soo Ha, Young-Soo Sohn, Sang-Joon Hwang

Samsung Electronics, Hwaseong, Korea

Abstract

LLM-based generative AI requires high-capacity and high-bandwidth memory. We propose an HBM4 with 2048 I/Os, 3.3TB/s bandwidth, and 36GB cube density. Core die uses the 6th-gen. DRAM and the base die uses a 4nm Fin-FET process. TSV count and data window are doubled for high-frequency margin. t_{CCDR} is improved via per-channel TSV-RDQS auto calibration, enhancing rank-to-rank access. PMBIST enables at-speed testing in CoW and SiP. The on-die WDQS skew cancellation ensures robust timing, enabling reliable high-speed operation and improved yield.

Large language models (LLM)-based generative AIs are employed across diverse applications: including image and video generation, text composition, and information retrieval. As generative-AI performance continues to improve, high-capacity and high-bandwidth memory becomes essential to handle the increasing model parameters at high speed. To meet this demand, we propose a high-bandwidth memory-4 (HBM4) DRAM. Compared to existing HBM generations, HBM3 [1,2] and HBM3E [3], the proposed HBM4 provides 2048 I/Os and a bandwidth of 3.3TB/s with a cube density of 36GB (using a 12-high stack). HBM4 incorporates several novel schemes and features: the core die is fabricated using the 6th-generation 10nm DRAM process, while the base die is implemented using a 4nm Fin-FET logic process. By exploiting the enhanced area efficiency of the new process, the number of through-silicon via (TSVs) DQs is doubled, thereby doubling the TSV data window, ensuring sufficient data margin for high-frequency operation. To enhance overall GPU system performance, a per-channel TSV read-data-strobe (RDQS) timing auto-calibration scheme is adopted to improve the rank-to-rank access delay (t_{CCDR}) between different SIDs. To maximize the programmability of at-speed testing at chip-on-wafer (CoW) and system-in-package (SiP) testing, a programmable-memory built-in self-test (PMBIST) is developed; leveraging the logic processes of the base die. To maintain robust HBM4 timing margins, an on-die at-speed scheme is added in the DWORD write-data strobe (WDQS) distribution, which monitors the 4-phase skew and cancels it using an internal clock. This enables wafer-level outlier screening and allows the per-DWORD trim that is determined at wafer test to be applied in CoW or SiP stages. Consequently, defective dies are identified before costly downstream processing, test time is reduced by the fully automatic on-die calibration, and final-product yield is increased.

In prior HBM generations, both the base die and the core die are fabricated using the DRAM processes. To address AI demands, which requires high bandwidth and fast data rates, we implemented the base die using Samsung Foundry's 4nm Fin-FET logic process for HBM4. Compared to the DRAM processes, the 4nm Fin-FET logic process enables higher operation speed and lower power consumption, while improving area efficiency via smaller transistors and the availability of a larger metal-layer stack. As a result, the HBM4 base die achieves substantial performance improvement while satisfying full JEDEC [4] specifications.

Leveraging the 4nm Fin-FET logic base die and the 6th-generation 10nm DRAM core die improves area efficiency, enables the implementation of double the number of DQ TSVs. Figure 15.6.1 shows the TSV configuration for HBM4: the total TSV count is quadrupled compared to HBM3E, due to 2× the channel count and 2× the DQ TSVs, for enhanced performance. Additionally, adaptive body-bias (ABB) control is used to minimize process-variation effects between core dies. ABB reduces delay variation across core dies, leading to improved t_{CCDR} performance. The use of 2× number of DQ TSVs and ABB control for the core dies enhances the TSV data window and reduces delay variation, thereby improving t_{CCDR} and enabling HBM4 to achieve a maximum operating frequency of up to 13Gb/s.

The minimum required time interval, t_{CCDR}, for consecutive READ commands issued between different stack IDs (SID), is the key timing parameter that enhances HBM performance for high-speed AI workloads. However, for HBMs constructed by stacking multiple core die slices, the system performance is inherently limited by timing variation between stacked core die slices. In addition, as the number of channels increases, the local variation in each core die worsens the per-channel timing variation, further impacting t_{CCDR}. Although the core dies use ABB to mitigate core-die process variation, the remaining delay mismatch and local variations still limit t_{CCDR}.

To address t_{CCDR}, we propose a per-channel TSV RDQS timing-calibration scheme that automatically detects inter-slice delay variation in core dies and compensates for it to increase the maximum data rate while improving t_{CCDR} (Fig. 15.6.2). This calibration scheme operates after power-up: determining the optimal delay code for each delay compensation circuit (DCDL). This scheme considers global variation between core-die slices and local variation between channels.

For each SID channel, a reference signal, derived from each SID's readiness signals, simultaneously propagates through the normal RDQS path, including a replica RDQS tree, to accurately model the timing variations between each channel. These timing differences are then quantized by a time-to-digital converter (TDC), then fed back into each channel's DCDL. The delay mismatches of each channel are thereby compensated.

The maximum data rate, satisfying $t_{CCDR} = 2n_{CK}$, is further improved from 7.8 to 9.4Gb/s by employing the proposed TSV t_{CCDR} RDQS-timing auto-calibration scheme.

PMBIST is a versatile memory-test pattern generator that embeds programmable logic in an HBM base die; supporting the full JEDEC HBM row/column command set and can issue commands on any clock edge. In traditional DRAM processes, power and area budgets limit the confined MBIST in HBM3E to only a few predefined patterns. The shift to a logic-process in HBM4 makes a fully programmable test methodology feasible, allowing direct programming of complex algorithms. Pattern programming and testing utilize the IEEE 1500 interface, enabling CoW and SiP verification. A dedicated software development kit (SDK) converts high-level test descriptors into binary microcode: speeding up measurement and debugging of critical AC parameters.

Figure 15.6.3 illustrates the PMBIST structure. SDK patterns are loaded into the pattern-storage unit via the IEEE 1500 interface as a set of PMBIST reduced-instruction-set instructions which (i) modify registers, (ii) issue commands/DQ based on register values, and (iii) perform loops. Multiple instructions are fetched and processed in parallel, then queued in a FIFO for sequential, at-speed issuance, enabling any pattern to be generated without impacting speed.

Figure 15.6.4 compares HBM4 PMBIST with HBM3E MBIST in terms of address-looping flexibility. MBIST uses a fixed looping sequence of column, row, bank, pseudo-channel, and SID. On the other hand, PMBIST allows the address-looping order to be freely configured, enabling t_{CCDR} and t_{CCDS} testing to perform SID and PC looping first.

Figure 15.6.5 shows the base-die DWORD WDQS clock-distribution network (CDN) integrated with the on-die scheme, which monitors the 4-phase clock skew and automatically cancels it along the signal path. In HBM4, timing margins at the high-speed physical layer (PHY) data input/output (I/O) become jitter limited as the I/O count and lane density increase; thinner interposer wiring increases loss/coupling and timing variation. This work uses a quarter-rate 4-phase WDQS scheme (I/IB/Q/QB). Therefore, any imbalance among the four phases shortens the one quarter interval and reduces data-interface eye width. Early detection and cancellation of such skew at the silicon bring-up stage is essential.

Consequently, the entire on-chip calibration procedure is performed at the target data rate. An internal clock (a ring oscillator in DWORD or a phase-locked loop in the direct-access region) is self-injected into WDQS_T/C, so no external injection or high-bandwidth probing across thousands of bumps is required. Before quadrature generation, the WDQS_T/C duty cycle is calibrated to 50% to prevent duty-induced quadrature error; the signal is then divided by 2 to produce quadrature phases. The read path on the WDQS CDN is observed, and the network is calibrated to minimize 4-phase skew to a few picoseconds: that is, phase spacing is corrected at the transmitter.

A key benefit is wafer-level screening, since during wafer test, devices that require correction beyond the available trim range (i.e., the trim setting saturates) are screened out early to avoid further test and packaging costs. The samples within the correction range have their per-DWORD trim values logged (IEEE 1500 accessible); these values can then be applied at later manufacturing stages (CoW or SiP), or the on-die trim can be re-run in situ if conditions change. This provides the per-DWORD trims logged at wafer and applied in CoW or SiP stages, avoiding manual per-DWORD tuning.

On the receiver side, write is not actively trimmed in this silicon because its clock routing was already prioritized (short paths, low-resistance metals, minimal vias), yielding intrinsically smaller skew and sufficient margin. The same internal-clocking and access points could be used to trim write if ever required.

Measured CoW proxy-package results at 10Gb/s confirm the effectiveness of this approach. When the wafer-test trims were applied during CoW evaluation, RDQS_T/C deterministic

2026 IEEE International Solid-State Circuits Conference (ISSCC) | 979-8-3315-8936-3/26/$31.00 ©2026 IEEE | DOI: 10.1109/ISSCC49663.2026.11409139

Authorized licensed use limited to: Hanyang University. Downloaded on April 10,2026 at 05:00:52 UTC from IEEE Xplore. Restrictions apply.

jitter (DJ) (dual-Dirac) decreased from 10.6 to 4.5ps, with a corresponding improvement in the read-data eye. In summary, adding on-die 4-phase skew monitoring and automatic cancellation to the WDQS CDN enables at-speed self-test at wafer, early outlier screening, and reusable per-DWORD trims that preserve WDQS alignment from wafer to final product.

Figure 15.6.6(top) shows the measured t_{CK} Shmoo plot. The results show that the fabricated HBM4 DRAM stacked in 12-high configuration achieves 13Gb/s/pin, corresponding to 3.3TB/s bandwidth with 32-channel operation. Figure 15.6.6(bottom) compares the key features between HBM3E and HBM4. In summary, the proposed HBM4 DRAM achieves a 260% bandwidth improvement while reducing V_{DDQ} supply voltage by 32%. The chip micrograph of the fabricated core and base dies with TSVs is shown in Fig. 15.6.7.

References:
[1] M.-J. Park *et al.*, "A 192-Gb 12-High 896-GB/s HBM3 DRAM With a TSV Auto-Calibration Scheme and Machine-Learning-Based Layout Optimization," in *IEEE JSSC*, vol. 58, no. 1, pp. 256-269, Jan. 2023, doi: 10.1109/JSSC.2022.3193354.
[2] Y. Ryu *et al.*, "A 16 GB 1024 GB/s HBM3 DRAM With Source-Synchronized Bus Design and On-Die Error Control Scheme for Enhanced RAS Features," in *IEEE JSSC*, vol. 58, no. 4, pp. 1051-1061, April 2023, doi: 10.1109/JSSC.2022.3232096.
[3] J. Lee *et al.*, "13.4 A 48GB 16-High 1280GB/s HBM3E DRAM with All-Around Power TSV and a 6-Phase RDQS Scheme for TSV Area Optimization," *ISSCC*, pp. 238-240, 2024, doi: 10.1109/ISSCC49657.2024.10454440.
[4] JESD270-4: JEDEC Standard High Bandwidth Memory (HBM) DRAM Specification, Apr. 2025. https://www.jedec.org/standards-documents/docs/jesd270-4

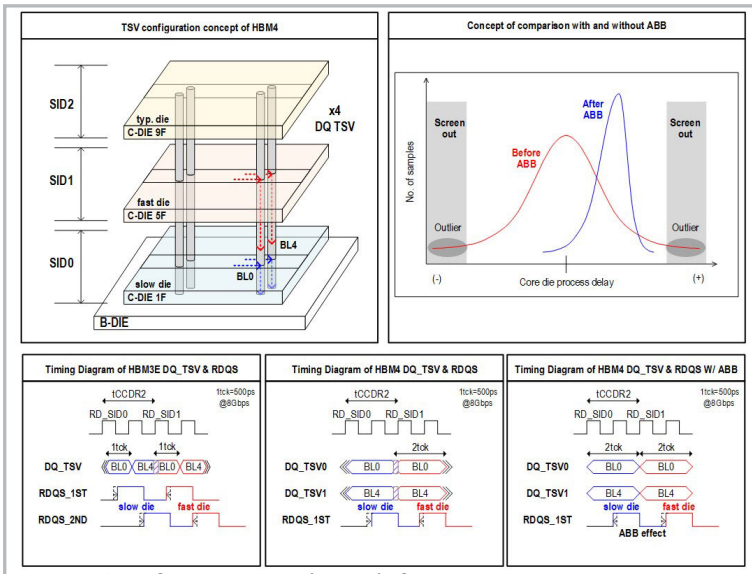

Figure 15.6.1: TSV configuration (top left). Core-die process-delay comparison with and without ABB (top right). Comparison of TSV data window among HBM3E, HBM4, and HBM4 with ABB (bottom).

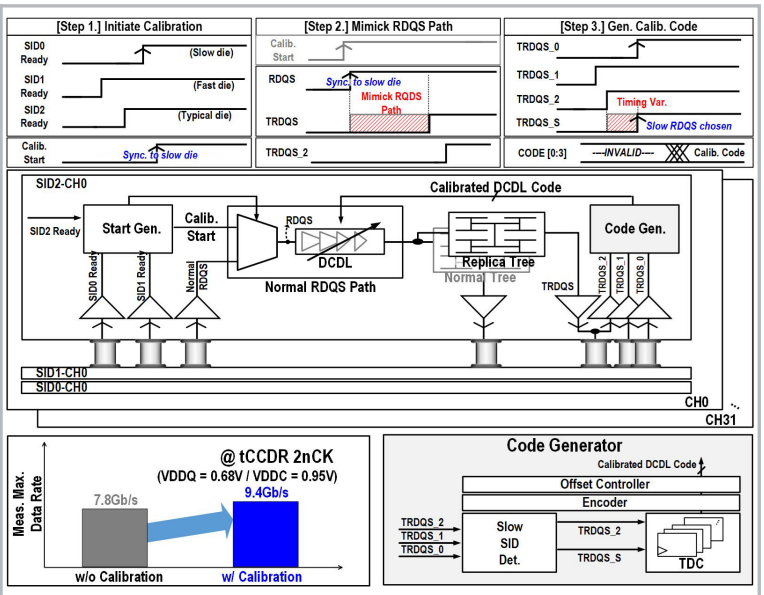

Figure 15.6.2: Conceptual illustration and block diagram of per-channel TSV t_{CCDR} RDQS auto-calibration scheme.

Authorized licensed use limited to: Hanyang University. Downloaded on April 10,2026 at 05:00:52 UTC from IEEE Xplore. Restrictions apply.

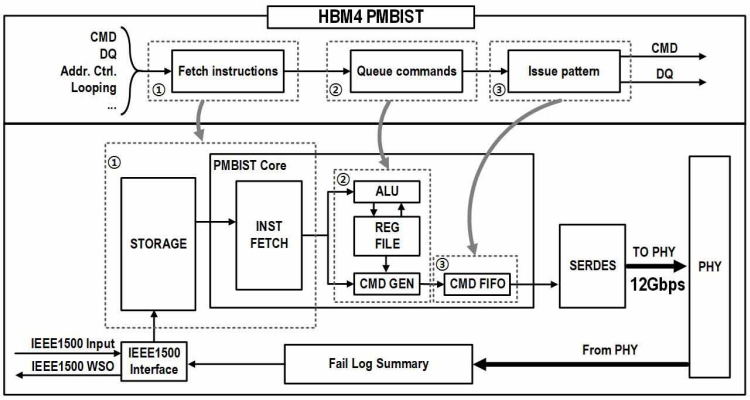

Category	HBM3E MBIST	HBM4 PMBIST
Max. data rate	9.2Gbps	12Gbps
Interface	IEEE1500 (WDR: Max. 2272bit)	IEEE1500 (WDR: Max. 512Kbit)
Pattern type	Pre-defined	Programmable
Address programmability	Fixed Loop Sequences	Flexible Loop Sequences

Figure 15.6.3: HBM4 PMBIST structure, and comparison to HBM3E MBIST.

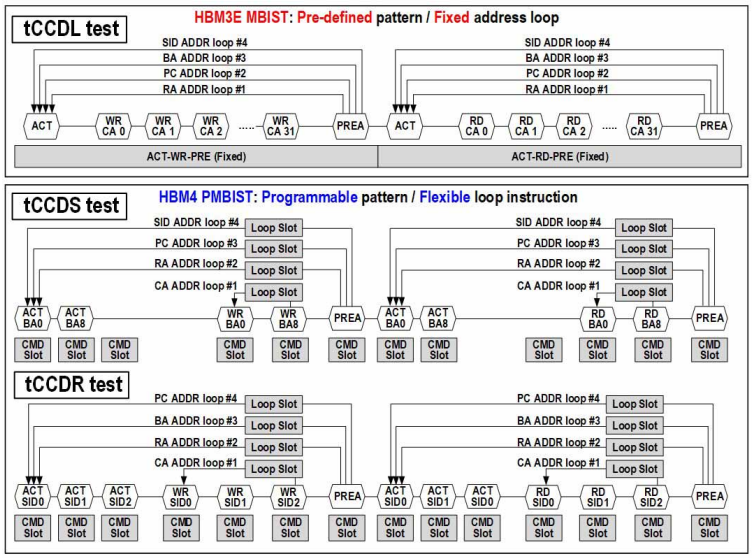

Figure 15.6.4: Address-looping flexibility comparison between HBM4 PMBIST and HBM3E MBIST.

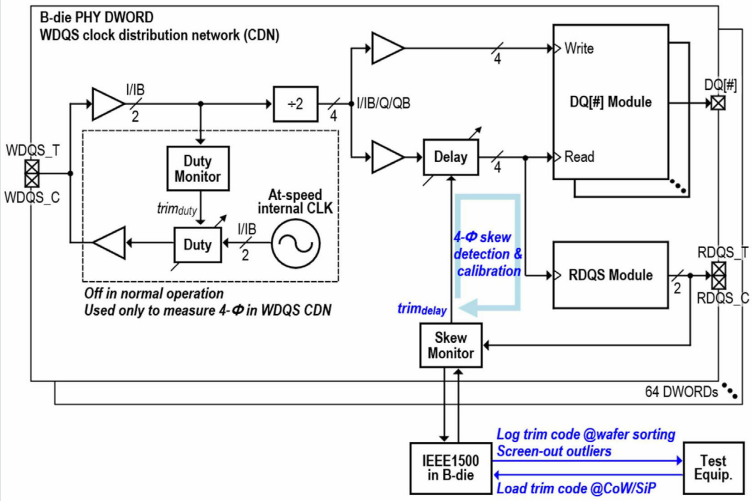

Figure 15.6.5: On-die at-speed 4-phase skew monitoring and cancellation for DWORD WDQS clock distribution, which enables wafer-level outlier screening.

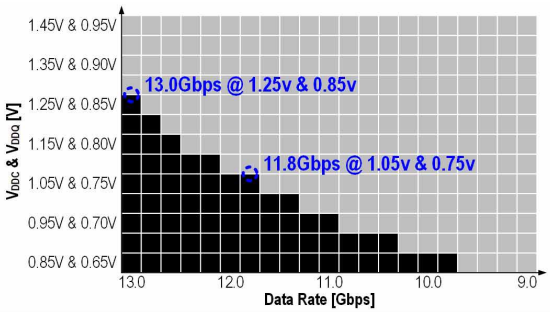

Generation	HBM3E	HBM4
Process	C&B-DIE: 4th Gen 10nm DRAM	C-DIE: 6th Gen 10nm DRAM B-DIE: 4nm Fin-FET
Supply Voltage	VDDC=1.1V, VDDQ=1.1V VDDQL=0.4V, VPPE=1.8V	VDDC=1.05V, VDDQ=0.75V VDDQL=0.4V, VPPE=1.8V
Max Data Rate	10.0Gb/s/pin	13.0Gb/s/pin
Organization	16 channel x 2PCH X 32I/O	32 channel x 2PCH X 32I/O
Bandwidth	1.25 TB/s per Cube	3.25 TB/s per Cube
Max Density	24Gb x 16-High = 48GB	24Gb x 12-High = 36GB
Microbump ballmap	7.08 mm x 8.82 mm	10.77 mm x 8.82 mm
Microbump pitch	96 μm x 110 μm	70 μm x 110μm
Chip Size	11 mm x 11 mm	12.8 mm x 11 mm

Figure 15.6.6: Measured t_{ck} Shmoo plot, and HBM3E and HBM4 key-feature summary table.

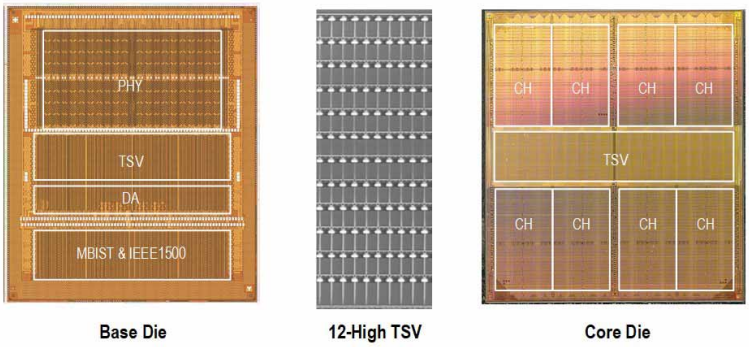

Base Die 12-High TSV Core Die

Figure 15.6.7: Chip micrograph of base die (left) and core die (right), with a cross-view of the 12-high TSV (middle).

Authorized licensed use limited to: Hanyang University. Downloaded on April 10,2026 at 05:00:52 UTC from IEEE Xplore. Restrictions apply.

 979-8-3315-8936-3/26/$31.00 ©2026 IEEE