28.4 A 4nm 1.15TB/s HBM3 Interface with Resistor-Tuned Offset-Calibration and In-Situ Margin-Detection

Kwanyeob Chae, Jiyeon Park, Jaegeun Song, Billy Koo, Jihun Oh, Shinyoung Yi, Won Lee, Dongha Kim, Taekyung Yeo, Kyeongkeun Kang, Sangsoo Park, Eunsu Kim, Sukhyun Jung, Sanghune Park, Sungcheol Park, Mijung Noh, Hyogyuem Rhew, Jongshin Shin

Samsung Electronics, Hwaseung, Korea

A critical performance bottleneck for memory-bound applications such as high-performance computing (HPC), artificial intelligence (AI), and machine learning (ML) applications is the limited memory bandwidth [1]. An HBM3 DRAM interface, based on a WDQS-clocking scheme with high-speed low-voltage-swing terminated logic (LVSTL) I/O, is a promising energy-efficient high-bandwidth solution. The WDQS-clocking scheme is expected to improve the read-valid-window margin (VWM), which is a major limiting factor in achieving DRAM access reliability at high speed. However, the long turn-around read path limits the read VWM improvement. In addition, it is essential to minimize interface area for clustered channel implementations by considering controllers, processing units and bus interconnects. Memory-access latency can be minimized by the close placement of functional units to the HBM3 interface.

To address these technical challenges, we introduce a digital HBM3 interface that is assisted by read VWM improvement techniques: an offset-calibration and an in-situ read margin-detection scheme. Furthermore, a low-power delay sensor, which enables accurate tracking and compensation of delay variation, is proposed to maintain DQS-to-DQ centering for DRAM access reliability under environmental variations. A slim bit-slice architecture, with stacked I/Os, enables a scalable and compact structure that improves the signal integrity by minimizing the interposer channel length.

Figure 28.4.1 shows a block diagram of the proposed digital bit-slice-based HBM3 interface. The bit-slice is the minimum macro unit for transmitting and receiving a data bit; it is placed near the corresponding I/O thereby minimizing the duty and jitter performance degradation between digital bit-slices and the I/O block. The bit-slice includes digital delay lines, which are used for reliable memory accesses. The delay lines are controlled to maintain DQS-to-DQ centering under environmental variations in conjunction with a digital delay sensor that tracks on-chip delay changes. The standard-cell-based digital bit-slice achieves high-speed and low-voltage operation while occupying a small area. This digital interface architecture achieves a 9.0Gb/s/pin operation from a 660mV supply.

Figure 28.4.2 shows the physical structure of the HBM3 interface. I/O arrays are stacked in two rows to accommodate a wide bit-width in a limited area. To interface the stacked I/Os, a slim bit-slice is designed to have ports on one side and routing channels on the other side. This stacking pattern, with non-flipped first row I/Os and flipped second row I/Os, provides a seamless interface between the digital slim bit-slices and the stacked I/Os. The routing channel in the non-flipped I/Os includes empty metal routing tracks to allow for connections to ports in the flipped I/O. As a result, the odd numbered slim bit-slices interface with the ports of the second row, and the even numbered slim bit-slices interface with the ports of the first row I/O. DQ I/Os are symmetrically placed on top and bottom, like a sandwich, for a 32b data PHY configuration. Using this structure, pins for the controller interface can be placed in the shared controller logic area, which improves the logic speed. Moreover, the divided I/O stacks relaxes signal routing congestion between I/Os and μ-bumps.

For the HBM3 interface, receiver input mismatches severely degrade the read VWM, since per-bit V_{REF} generation is not feasible, due to area and power limitations. Figure 28.4.3 shows the proposed resistor-tuned offset-calibration method in combination with a V_{REF} generator. A single V_{REF} covering a wider bit-width is more area efficient, but results in larger input-offsets. In this work, a coarse V_{REF} generator with an offset-calibration scheme is proposed to simultaneously minimize the size of V_{REF} generator and offset mismatch. The coarse V_{REF} step resolution reduces the number of multiplexers required by half, which contributes to a 20% V_{REF} circuit area reduction. However, this coarse V_{REF} step resolution degrades the read VWM due to an increased quantization error. To compensate for this degradation, an offset-calibration circuit is used with the coarse V_{REF} generator. The per-bit offset tuning calibrates out the remaining offset after the coarse V_{REF} control; compensating for both the mismatch and the V_{REF} quantization error, while at the same time minimizing the area consumption. In this work, stacked-transistor-based resistor tuning is used to tune the output resistance, while consuming minimal area; effectively calibrating the input mismatch and providing a per-bit suitable V_{REF}. The tunable transistor-array is added to the secondary resistor to control the output impedance with fine resolution. Since the primary resistor is connected to the output node, the high-frequency degradation, due to an increased parasitic capacitance, is insignificant compared to the conventional input-transistor-based offset tuning [6]. As a result, the proposed solution achieves optimized per-bit offset within compact area. In addition, a feed-forward equalization scheme, based on an AC-coupling capacitor, is used in this work to boost the write performance; thereby, leading to a 9.0Gb/s/pin operation from a 300mV supply (VDDQ). The measured results of the AC boost are shown in Fig. 28.4.3. The internal interposer signal channel is connected to an external ball for board-level testing.

The HBM3 interface includes an all-digital delay sensor to detect on-chip delay changes to maintain access stability under dynamic delay fluctuation. The proposed delay sensor includes a pre-processing logic block, as shown in Fig. 28.4.4. The pre-processing logic generates Di and Ds, which are generated from multiple clock edges. These are used for delay measurement; thus, the phase-detection and delay error caused by process variation is minimized. In addition, the control logic can be simplified since pre-processed control signals are used; the output of the phase detector, 1 or 0, leads to a delay increase or decrease. The DQ delay for each slim bit-slice is calculated based on the primary selection value, from the all-digital delay sensor, to compensate for delay changes. As a result, DQS-to-DQ centering is accurately maintained under environmental variations.

External environmental variations significantly impact memory access reliability. To maintain access reliability, periodic training is essential to compensate for any changes in the external delays. A periodic read training results in a 0.6μs access black-out, per our estimate, once initiated. A periodic memory-access pause causes more excessive performance degradation than required, considering the infrequency of delay changes. This work proposes in-situ margin-detection to measure the real-time read VWM for the data traffic. This scheme is used to initiate the read training process only when required. Figure 28.4.5 shows the in-situ margin-detection block; including a digital DQ-de-skewing delay line with multiple output ports, each with different DQ delay. The center DQ is the data sample used for data read-out, the other DQs are used to measure the left and the right distances from the center, which indicate the read VWM. If DQS-to-DQ centering shifts, then the left or the right edge detection signal indicating a centering shift is set. Only when an edge is detected is the read training initiated to compensate for a delay change. Using the proposed margin-detection, on live data traffic, allows unnecessary periodic read training to be eliminated.

Experimental results, shown in Fig. 28.4.6, illustrate the wide operating range of the proposed HBM3 interface. The maximum operating frequency of DRAM cell accesses is 8.0Gb/s/pin with an eye with of 0.39UI, which is limited by the DRAM bit rate. The HBM3 interface achieves multiple-input shift-register (MISR) access at 9.0Gb/s/pin from a 660mV supply. The proposed offset-calibration improves the read VWM by 16.7%. In addition, the proposed in-situ read margin-detection minimizes the performance penalty, by eliminating unnecessary periodic training. The proposed HBM3 interface also shows an impressive supply noise tolerance: a ±220mV supply voltage change during memory accesses.

The chip micrograph and the assembled 2.5D package are shown in Fig. 28.4.7. The proposed slim bit-slice architecture in conjunction with a stacked I/O structure achieves a reliable high bandwidth, up to 1.15TB/s, while consuming only 0.0246mm²/bit. The area- and energy-efficiency comparison to prior work is summarized in Fig. 28.4.7.

References:

[1] M.-J. Park et al., "A 192-Gb 12-High 896-GB/s HBM3 DRAM with a TSV Auto-Calibration Scheme and Machine-Learning-Based Layout Optimization," *ISSCC*, pp. 444-445, 2022.

[2] K.-Y. Chae et al., "An 8nm All-Digital 7.3Gb/s/pin LPDDR5 PHY with an Approximate Delay Compensation Scheme," *IEEE Symp. VLSI Circuits,* pp. 96-97, 2019.

[3] S.-M. Lee et al., "An 8nm 18Gb/s/pin GDDR6 PHY with TX Bandwidth Extension and RX Training Technique," *ISSCC*, pp. 338-339, 2020.

[4] S.-Y. Hwang et al., "A 3.2 Gbps/pin HBM2E PHY with Low Power I/O and Enhanced Training Scheme for 2.5D System-in-Package Solution," *IEEE Hot Chips Symp.*, pp.1-13, 2020.

[5] H.-G. Ko et al., "A 370-fJ/b, 0.0056 mm²/DQ, 4.8-Gb/s DQ Receiver for HBM3 with a Baud-Rate Self-Tracking Loop," *IEEE Symp. VLSI Circuits*, pp. 94-95, 2019.

[6] K.-H. Kim et al., "A 24Gb/s/pin 8Gb GDDR6 with a Half-Rate Daisy-Chain-Based Clocking Architecture and IO Circuitry for Low-Noise Operation," *ISSCC*, pp. 344-345, 2021.

2023 IEEE International Solid-State Circuits Conference (ISSCC) | 978-1-6654-9016-0/23/$31.00 ©2023 IEEE | DOI: 10.1109/ISSCC42615.2023.10067736

Authorized licensed use limited to: Hanyang University. Downloaded on April 10,2026 at 05:10:01 UTC from IEEE Xplore. Restrictions apply.

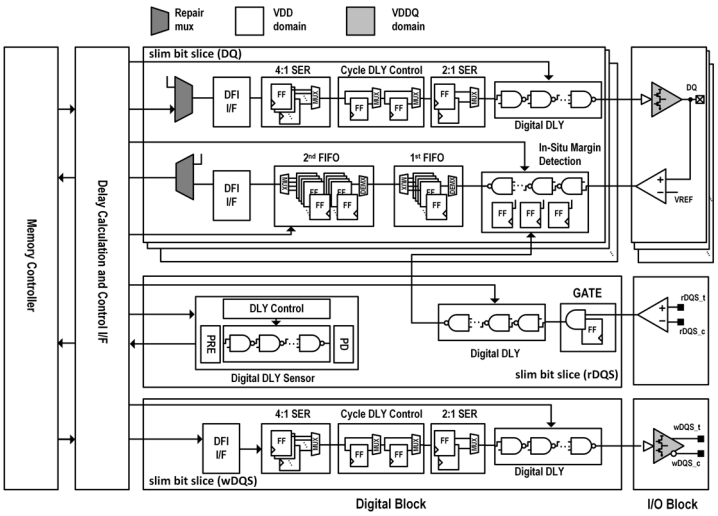

Figure 28.4.1: Block diagram of the proposed HBM3 interface.

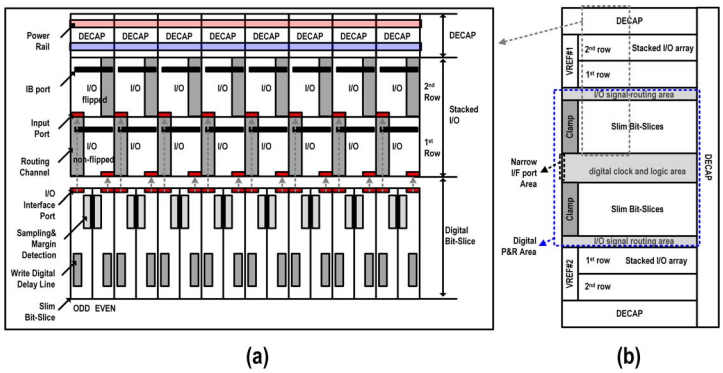

Figure 28.4.2: (a) The physical structure of the stacked I/O with slim bit-slice for compact configuration and (b) the sandwich structure for 32b data PHY unit.

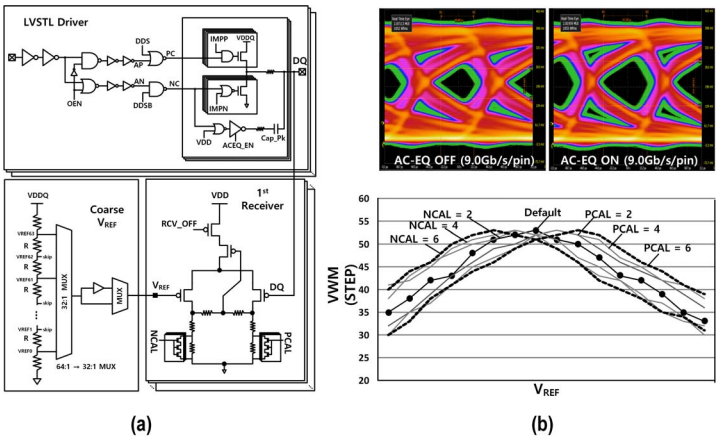

Figure 28.4.3: (a) A 0.3V LVSTL driver and a receiver with resistor-tuned offset-calibration combined with a coarse V_{REF} generator. (b) Measured AC-EQ effect and offset-tuning results.

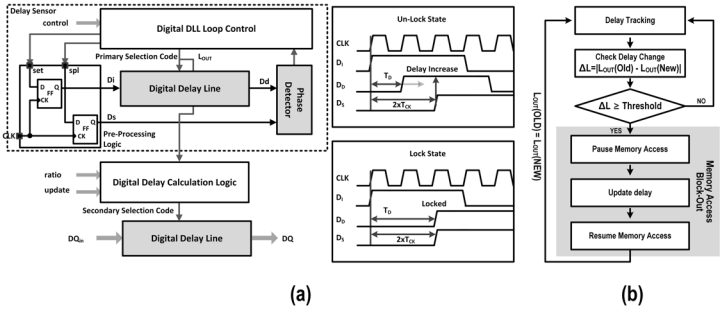

Figure 28.4.4: (a) The proposed digital-delay sensor. (b) Proposed delay update procedure.

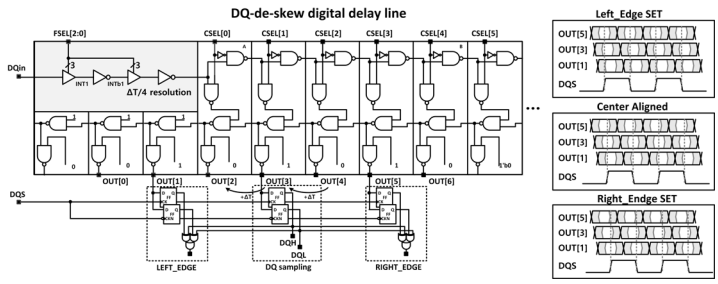

Figure 28.4.5: In-situ read margin-detection block.

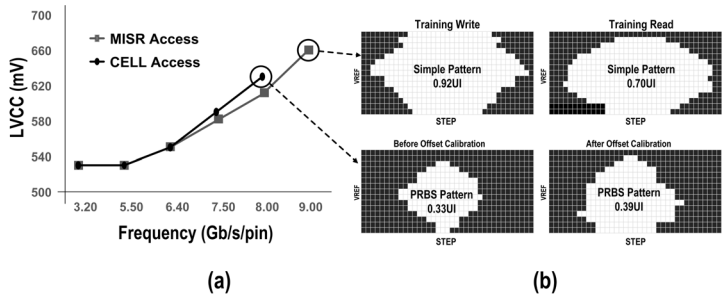

Figure 28.4.6: (a) Measured operating frequency and voltage. (b) Cell read VWM with offset-calibration at 8.0Gb/s/pin and MISR write/read VWM at 9.0Gb/s/pin.

Authorized licensed use limited to: Hanyang University. Downloaded on April 10,2026 at 05:10:01 UTC from IEEE Xplore. Restrictions apply.

Reference	[2]	[3]	[4]	[5]	This Work
Interface	LPDDR5	GDDR6	HBM2E	HBM3 RCV.	HBM3
Technology	8nm	8nm	7nm	65nm	4nm
Speed	7.3Gb/s/pin	18Gb/s/pin	3.2Gb/s/pin	4.8Gb/s/pin	9.0Gb/s/pin
B/W	14.6GB/s	36GB/s	409.6GB/s	N/A	1.15TB/s
VDD/VDDQ	0.79V/0.5V	0.85V/1.35V	0.75V/1.2V	1.1V	0.66V/0.3V
Area Per-Bit (mm^2/bit)	0.0246	0.1038	0.0056	0.0056	0.0046
Energy Efficiency (pJ/bit)	1.17	N/A	1.07	0.37	0.29

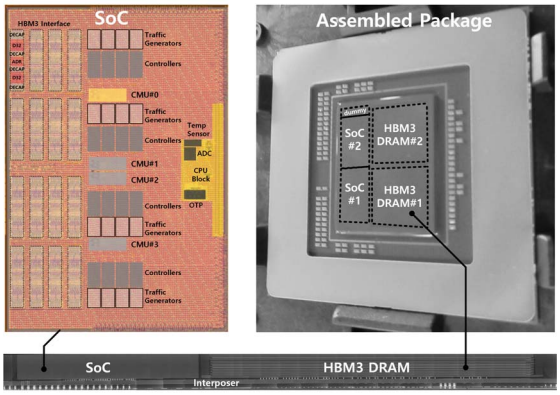

Figure 28.4.7: Chip micrograph and comparison table to prior work.

Authorized licensed use limited to: Hanyang University. Downloaded on April 10,2026 at 05:10:01 UTC from IEEE Xplore. Restrictions apply.

 978-1-6654-9016-0/23/$31.00 ©2023 IEEE