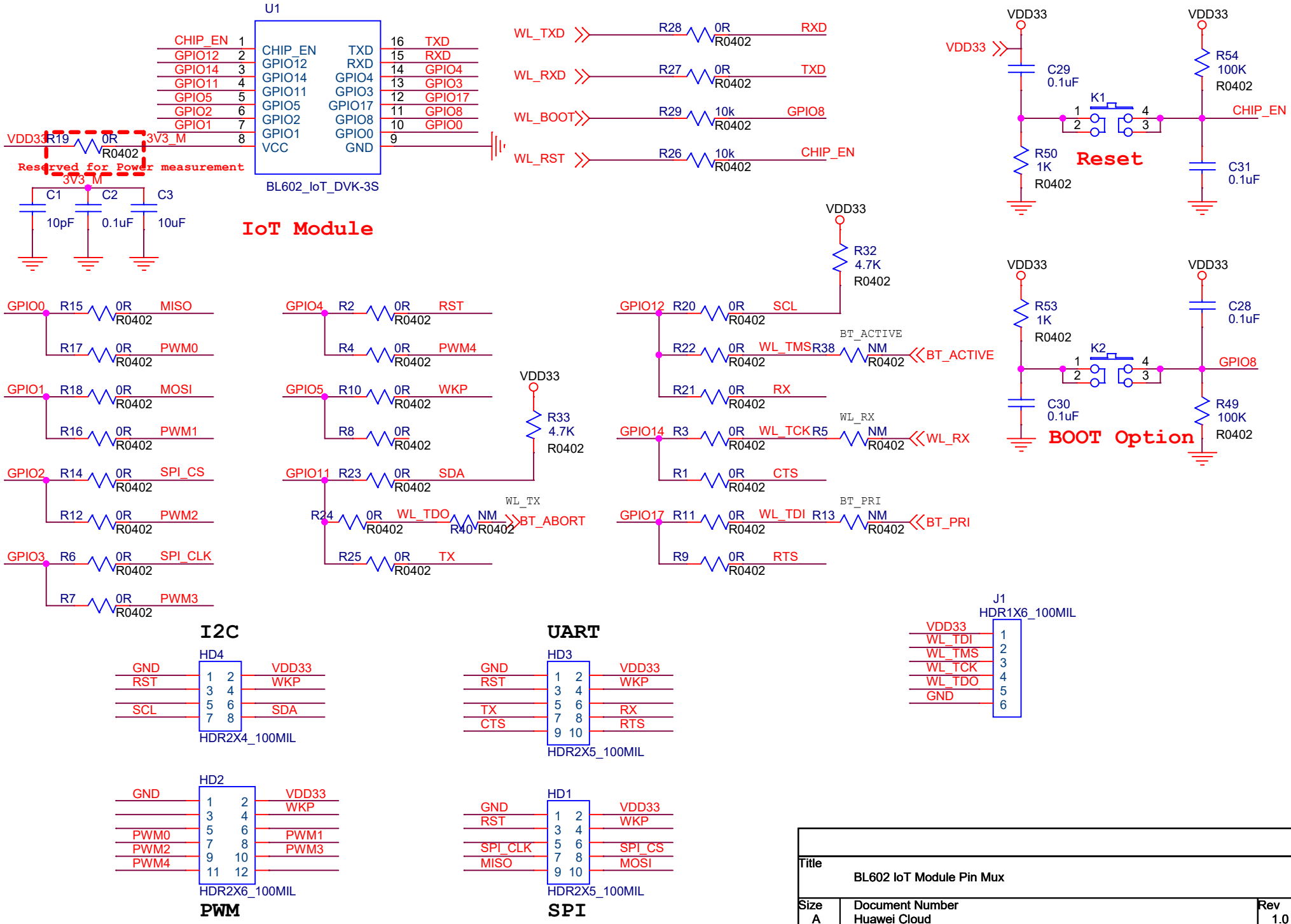

Title	BL602 IoT Module Pin Mux	
Size A	Document Number Huawei Cloud	Rev 1.0
Date: Tuesday, February 09, 2021	Sheet 1 of 2	

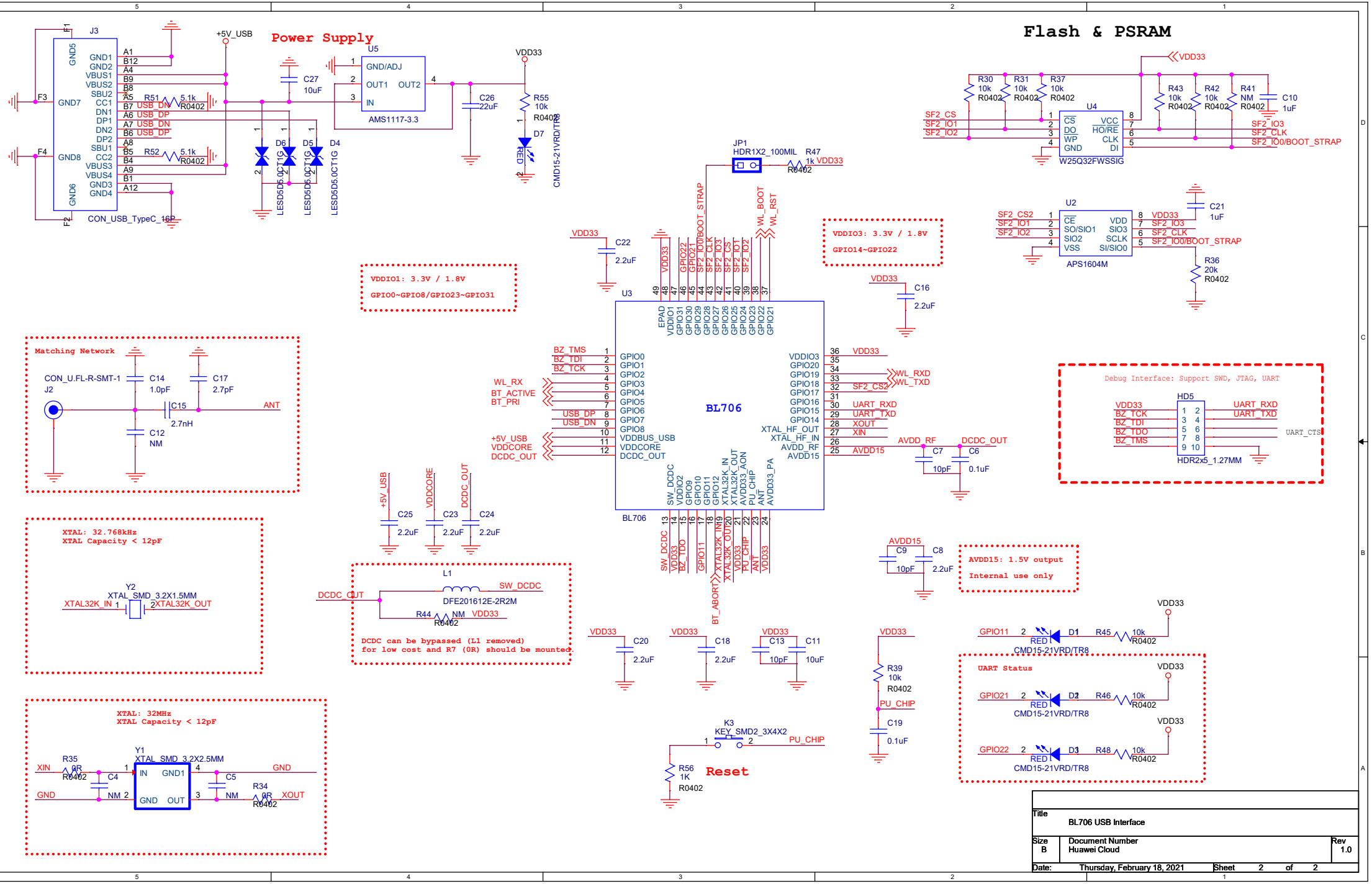
Power Supply
Flash & PSRAM
J3
CON_USB_TypeC_16P
+5V_USB
U5
GND/ADJ
OUT1
OUT2
IN
AMS1117-3.3
VDD33
C27 10uF
C26 22uF
R55 10k R0402
D7 RED
CMD15-21VRD/TR8
D6 D5 D4
LESD5D5.0CT1G
R51 5.1k R0402
R52 5.1k R0402
USB_DN
USB_DP
JP1 HDR1X2_100MIL
R47 1k R0402
U4
W25Q32FWSSIG
SF2_CS
SF2_IO1
SF2_IO2
SF2_IO3
SF2_CLK
SF2_IO0/BOOT_STRAP
R30 10k R0402
R31 10k R0402
R37 10k R0402
R43 10k R0402
R42 10k R0402
R41 NM R0402
C10 1uF
U2
APS1604M
C21 1uF
R36 20k R0402
SF2_CS2
VDD33
U3
BL706
EPAD
VDDIO1
GPIO31
GPIO30
GPIO29
GPIO28
GPIO27
GPIO26
GPIO25
GPIO24
GPIO23
GPIO22
GPIO21
GPIO22
GPIO21
SF2_IO0/BOOT_STRAP
SF2_CLK
SF2_IO3
SF2_CS
SF2_IO1
SF2_IO2
WL_BOOT
WL_RST
VDDIO3: 3.3V / 1.8V
GPIO14~GPIO22
VDDIO1: 3.3V / 1.8V
GPIO0~GPIO8/GPIO23~GPIO31
C22 2.2uF
C16 2.2uF
BZ_TMS
BZ_TDI
BZ_TCK
WL_RX
BT_ACTIVE
BT_PRI
USB_DP
USB_DN
+5V_USB
VDDCORE
DCDC_OUT
GPIO0
GPIO1
GPIO2
GPIO3
GPIO4
GPIO5
GPIO6
GPIO7
GPIO8
VDDBUS_USB
VDDCORE
DCDC_OUT
VDDIO3
GPIO20
GPIO19
GPIO18
GPIO17
GPIO16
GPIO15
GPIO14
XTAL_HF_OUT
XTAL_HF_IN
AVDD_RF
AVDD15
WL_RXD
WL_TXD
SF2_CS2
UART_RXD
UART_TXD
XOUT
XIN
AVDD_RF
DCDC_OUT
AVDD15
C7 10pF
C6 0.1uF
SW_DCDC
VDD33
BZ_TDO
GPIO11
XTAL32K_IN
XTAL32K_OUT
AVDD33_AON
PU_CHIP
ANT
AVDD33_PA
BT_ABORT
Matching Network
CON_U.FL-R-SMT-1
J2
C14 1.0pF
C17 2.7pF
C15 2.7nH
C12 NM
ANT
Debug Interface: Support SWD, JTAG, UART
HD5
HDR2x5_1.27MM
UART_RXD
UART_TXD
UART_CTS
BZ_TCK
BZ_TDI
BZ_TDO
BZ_TMS
C25 2.2uF
C23 2.2uF
C24 2.2uF
XTAL: 32.768kHz
XTAL Capacity < 12pF
Y2
XTAL_SMD_3.2X1.5MM
XTAL32K_IN
XTAL32K_OUT
L1
DFE201612E-2R2M
SW_DCDC
R44 NM R0402
DCDC can be bypassed (L1 removed)
for low cost and R7 (0R) should be mounted.
C9 10pF
C8 2.2uF
AVDD15: 1.5V output
Internal use only
C20 2.2uF
C18 2.2uF
C13 10pF
C11 10uF
R39 10k R0402
PU_CHIP
C19 0.1uF
GPIO11
D1 RED
R45 10k R0402
CMD15-21VRD/TR8
UART Status
GPIO21
D2 RED
R46 10k R0402
GPIO22
D3 RED
R48 10k R0402
XTAL: 32MHz
XTAL Capacity < 12pF
Y1
XTAL_SMD_3.2X2.5MM
R35 0R R0402
C4 NM
C5 NM
R34 0R R0402
XIN
XOUT
GND
K3
KEY_SMD2_3X4X2
R56 1K R0402
Reset
Title
BL706 USB Interface
Size B
Document Number
Huawei Cloud
Rev 1.0
Date: Thursday, February 18, 2021
Sheet 2 of 2