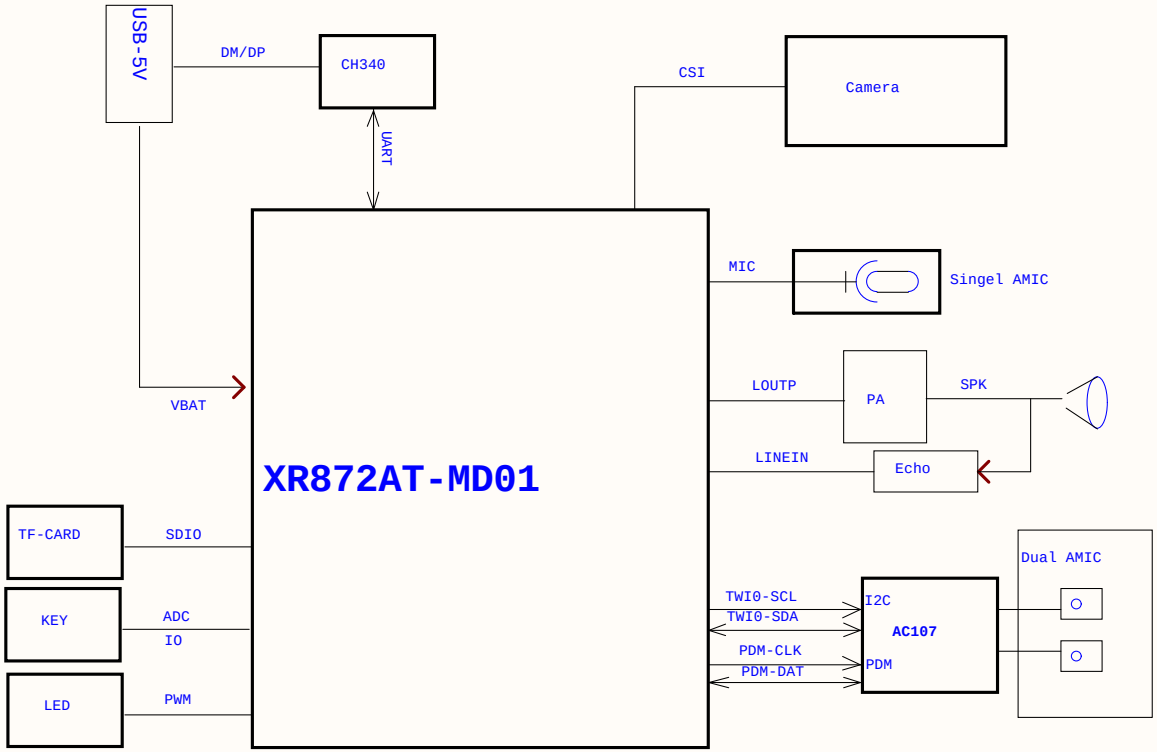

Title		
Size A4	Number	Revision
Date: 2019/11/21	Sheet of	
File: D:\hardware\..\02 BLOCK-DIAGRAM.SchDoc	Drawn By:	

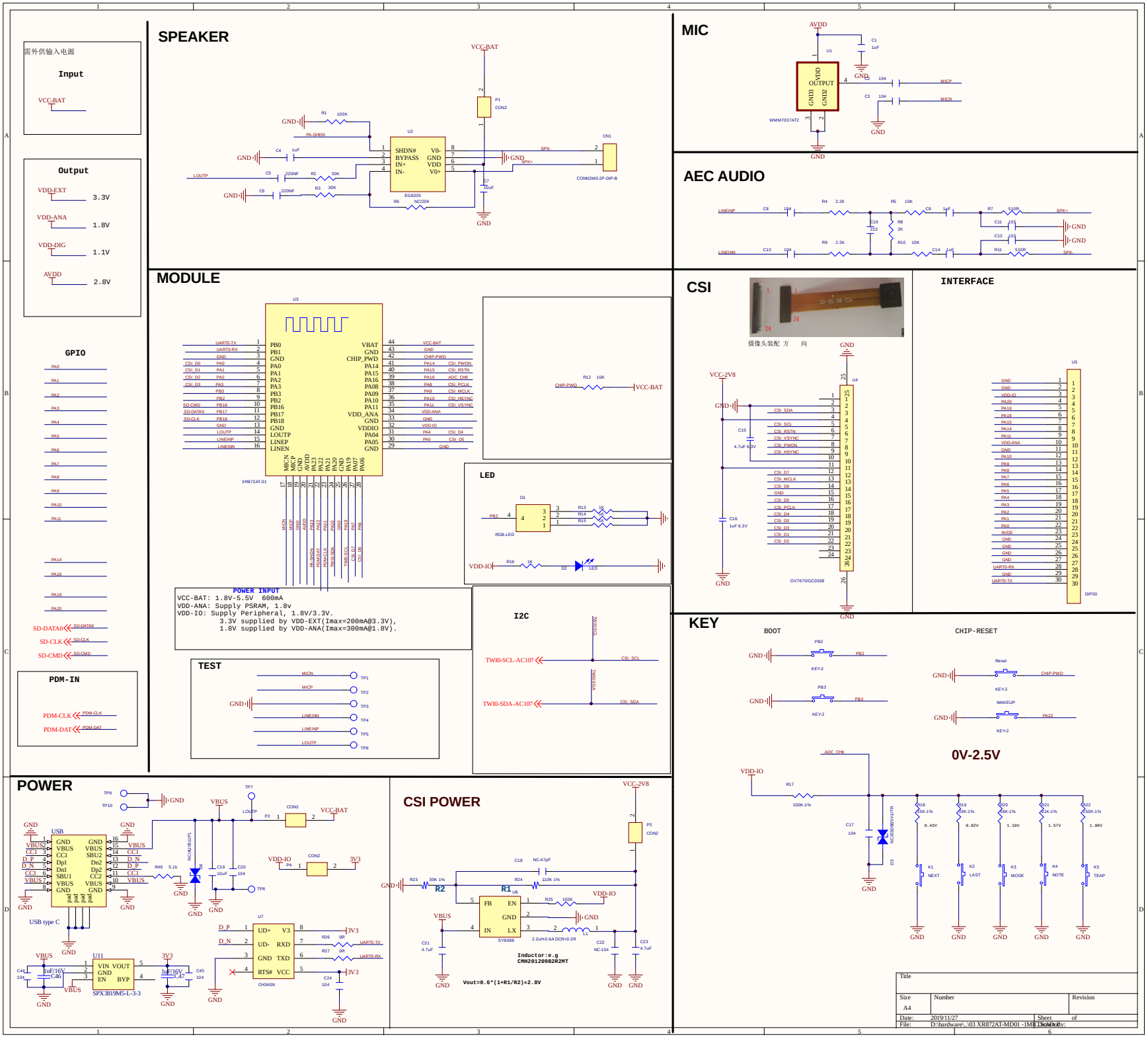
需外供输入电源
Input
VCC-BAT
Output
VDD-EXT 3.3V
VDD-ANA 1.8V
VDD-DIG 1.1V
AVDD 2.8V
GPIO
PDM-IN
PDM-CLK
PDM-DAT
SPEAKER
VCC-BAT
P1 CON2
R1 100K
PA-SHDN
U2
SHDN# BYPASS IN+ IN-
V0- GND VDD V0+
EG8305
R6 NC220K
C4 1uF
C5 220NF
R2 30K
C6 220NF
R3 30K
LOUTP
SPK-
SPK+
CN1
CONN2M0-2P-DIP-B
MIC
AVDD
U1
VDD OUTPUT GND1 GND2
WMM7037AT2
C1 1uF
C2 104
C3 104
MICP
MICN
GND
MODULE
U3
XR872AT-01
PB0 PB1 GND PA0 PA1 PA2 PA3 PB3 PB2 PB16 PB17 PB18 GND LOUTP LINEIP LINEIN
MICN MICP GND AVDD PA23 PA22 PA21 PA20 GND PA19 PA07 PA06
VBAT GND CHIP_PWD PA14 PA15 PA16 PA08 PA09 PA10 PA11 VDD_ANA GND VDDIO PA04 PA05 GND
UART0-TX UART0-RX GND CSI_D0 CSI_D1 CSI_D2 CSI_D3 SD-CMD SD-DATA0 SD-CLK
VCC-BAT CHIP-PWD PA14 PA15 PA16 PA8 PA9 PA10 PA11 VDD-ANA GND VDD-IO PA4 PA5 GND
CSI_PWDN CSI_RSTN ADC_CH6 CSI_PCLK CSI_MCLK CSI_HSYNC CSI_VSYNC CSI_D4 CSI_D5
R12 10K
LED
D1
RGB-LED
R13 2K
R14 2K
R15 2K
VDD-IO
R16 1K
D2
POWER INPUT
VCC-BAT: 1.8V-5.5V 600mA
VDD-ANA: Supply PSRAM, 1.8v
VDD-IO: Supply Peripheral, 1.8V/3.3V.
3.3V supplied by VDD-EXT(Imax=200mA@3.3V),
1.8V supplied by VDD-ANA(Imax=300mA@1.8V).
TEST
MICN MICP LINEINN LINEINP LOUTP
TP1 TP2 TP3 TP4 TP5 TP6
I2C
TWI0-SCL-AC107
TWI0-SDA-AC107
CSI_SCL
CSI_SDA
AEC AUDIO
LINEINP
LINEINN
C8 104
C13 104
R4 2.2K
R9 2.2K
R5 10K
R10 10K
R8 2K
C10 222
C9 1uF
C14 1uF
R7 510R
R11 510R
C11 103
C12 103
SPK+
SPK-
CSI
摄像头装配 方 向
U4
VCC-2V8
C15 4.7uF 6.3V
C16 1uF 6.3V
OV7670/GC0308
INTERFACE
U5
DIP30
KEY
BOOT
CHIP-RESET
PB2
PB3
KEY-2
Reset
CHIP-PWD
WAKEUP
PA22
0V-2.5V
ADC_CH6
VDD-IO
R17 100K-1%
C17 104
D3
R18 5K-1% 0.43V
R19 13K-1% 0.82V
R20 6K-1% 1.18V
R21 11K-1% 1.57V
R22 50K-1% 1.98V
K1 NEXT
K2 LAST
K3 MODE
K4 NOTE
K5 TEAP
POWER
USB
USB type C
VBUS
LOUTP
CON2
VCC-BAT
VDD-IO
3V3
R46 5.1k
C19 10uF
C20 104
U7
CH340N
UD+ UD- GND RTS# V3 RXD TXD VCC
D_P D_N
R26 0R
R27 0R
UART0-TX
UART0-RX
U11
SPX3819M5-L-3-3
VIN VOUT GND EN BYP
C44 104
C46 1uF/16V
C47 1uF/16V
C45 104
C24 104
CSI POWER
VCC-2V8
P3 CON2
R23 30K 1%
R2
R1
R24 110K 1%
C18 NC-47pF
U6
SY8088
FB EN GND IN LX
R25 100K
VDD-IO
L1 2.2uH±0.6A DCR<0.2R
C21 4.7uF
C22 NC-104
C23 4.7uF
Inductor:e.g CMH201209B2R2MT
Vout=0.6*(1+R1/R2)=2.8V
Title
Size A4
Number
Revision
Date: 2019/11/27
Sheet of
File: D:\hardware\..\03 XR872AT-MD01 -1M\Chinese.
Drawn By:

CODEC

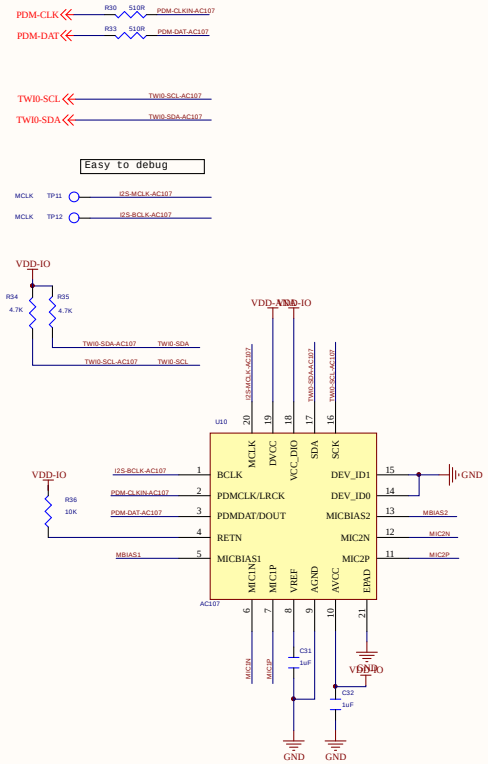

TF-CARD

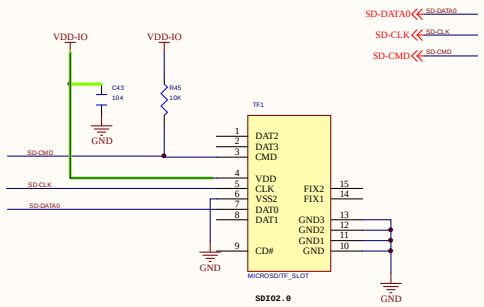

MEMS AMIC

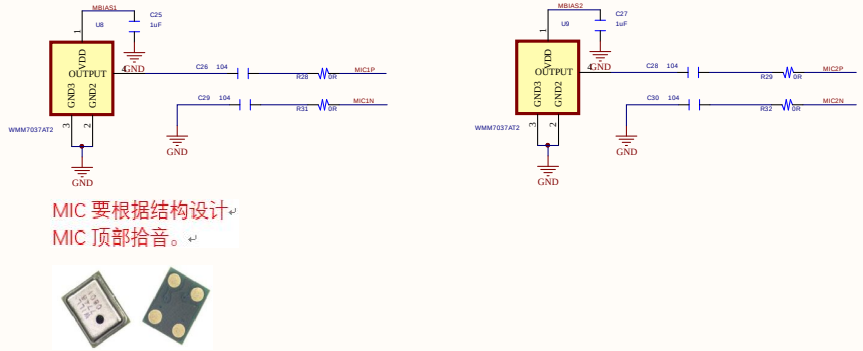

MIC 要根据结构设计
MIC 顶部拾音。

ECM AMIC

MIC 要根据结构设计，
建议分体，接线连接。

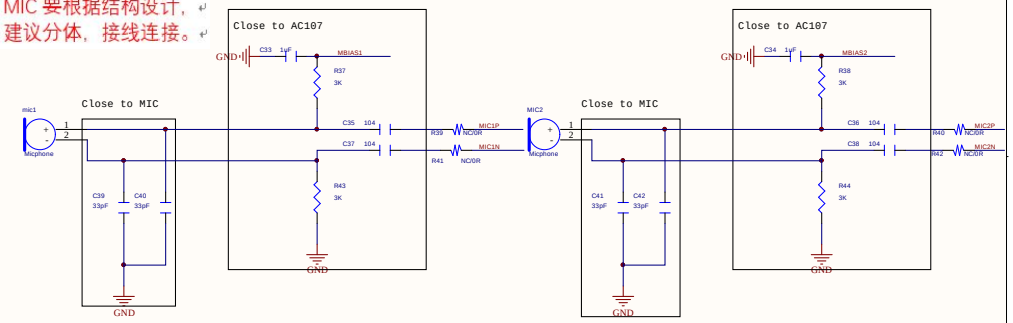

Title		
Size A4	Number	Revision
Date: 2019/11/21	Sheet	of
File: D:\hardware\..\04 AC107-2 MIC-CODEC.PrjPcb	Drawn By:	