Embedded System HW Design
Week6
Automotive

- **Networked control**

- **Vehicular networks**:
  - CAN.
  - TTP, FlexRay, etc.

- **Safety and security**.

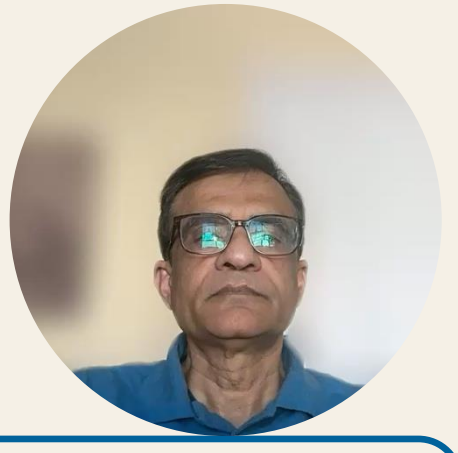

Template designed by Tim Palmer tpalmer@vt.edu

Embedded System HW Design
Week6
Networked Control

- **Computer networks** that perform real-time control functions.
  - Allows more computing power to be applied than is available from a single CPU.
  - Allows processors to be physically near the devices they control.

- **Electronic control unit (ECU**) is a digital unit in a car.

- **Line replaceable unit (LRU)** is a module in an airplane avionics system.

Template designed by Tim Palmer tpalmer@vt.edu

Embedded System HW Design
Week6
Vehicles as Networks

- 1/3 of cost of car/airplane is electronics/avionics

- Modern cars may have 100+ processors and operate with 100 million lines of code

- **Network applications**:
  - Vehicle control.
  - Instrumentation.
  - Communication.
  - Passenger entertainment systems.

Template designed by Tim Pulver, 2010-2012, Version 1.

Embedded System HW Design
Week6
Example Automotive Processors

- **Infineon XC2200** body control processor:
  - 16/32 bit processor.
  - SRAM and EEPROM.
  - Analog/digital converter.
  - Pulse width modulator.
  - Serial channels.
  - Light drivers.
  - Network connections.

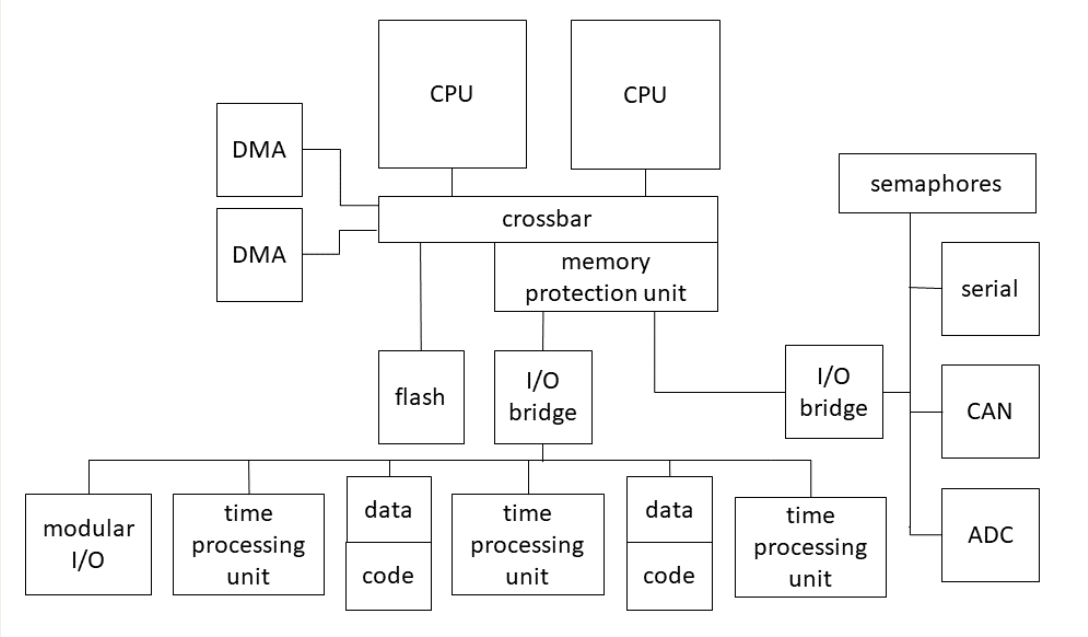

Template designed by Tim Palmer (tpalmer@vt.edu)

Embedded System HW Design
Week6
Freescale MPC5767R

- **Freescale MPC5767R** for powertrain systems.
- Dual-processor Power Architecture CPUs, including vector processors.
- 16K data and instruction caches.
- Time processing unit used to generate and read waveforms.
- CAN, Lin, FlexRay interfaces.

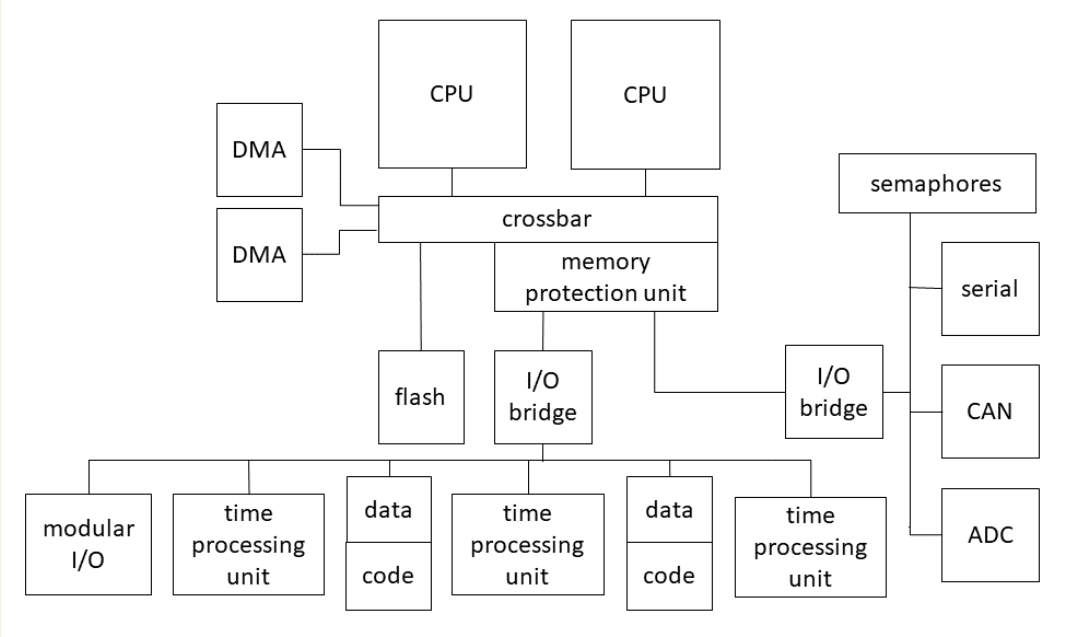

Template designed by Tim Palmer (tpalmer@vt.edu)

Embedded System HW Design
Week6
Automobile Network

- Engine provides power to drive the wheels via the transmission
- Transmission adjusts gearing based on operating characteristics
- ABS controls brakes.

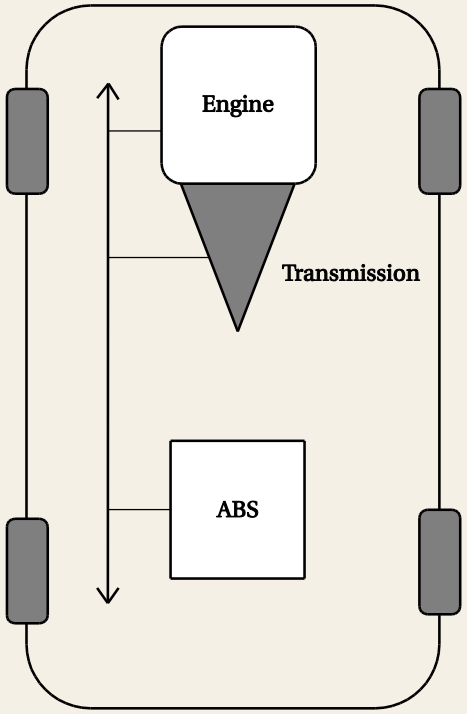

Template designed by Tim Palmer, tpalmer@vsu.edu

Embedded System HW Design
Week6
Automotive Network Architectures

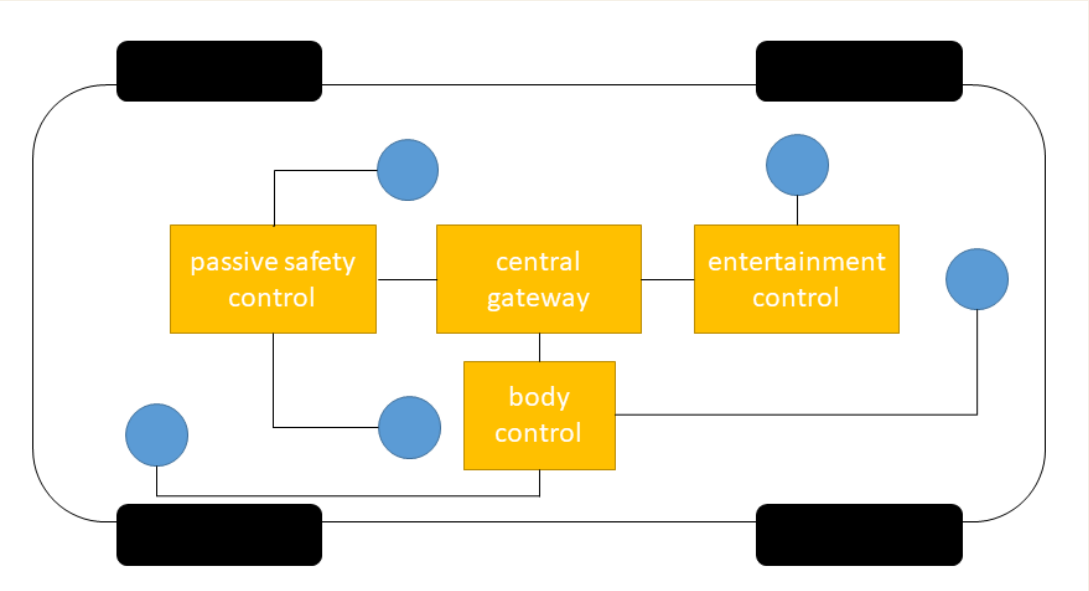

Traditional Domain-based Architecture

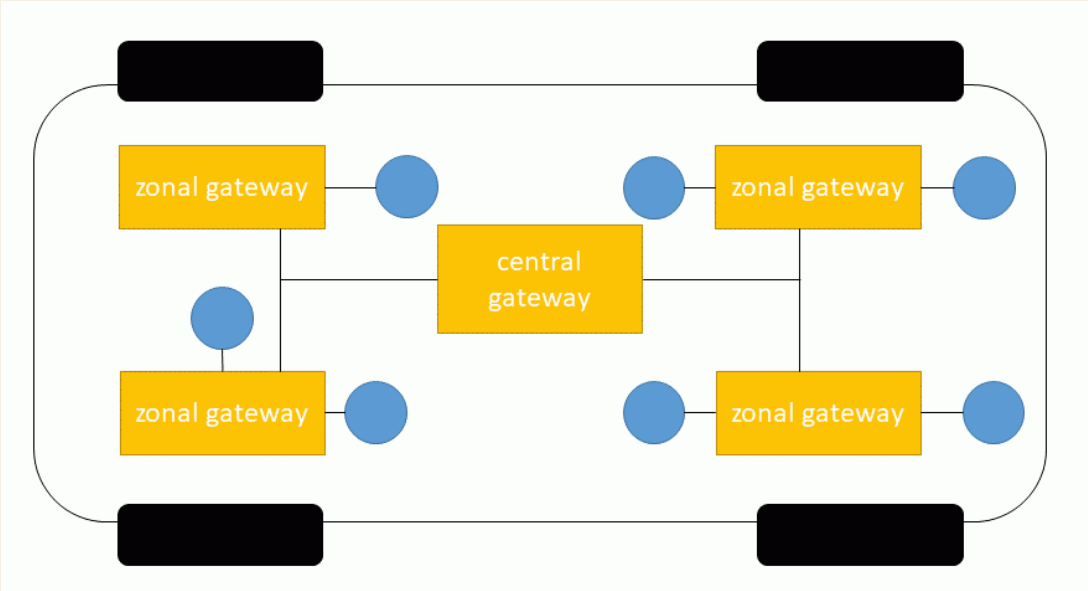

Zonal Architecture

Rivian using Zonal Architecture

Template designed by Tim Palmer, tpalmer@vsu.edu

Embedded System HW Design
Week6
CAN Bus

- First used in 1991
- Serial bus, 1 Mb/sec up to 40 m
- Synchronous bus
- Logic 0 dominates logic 1 on bus
- **Arbitrated with CSMA/AMP**:
  - Arbitration on message priority.

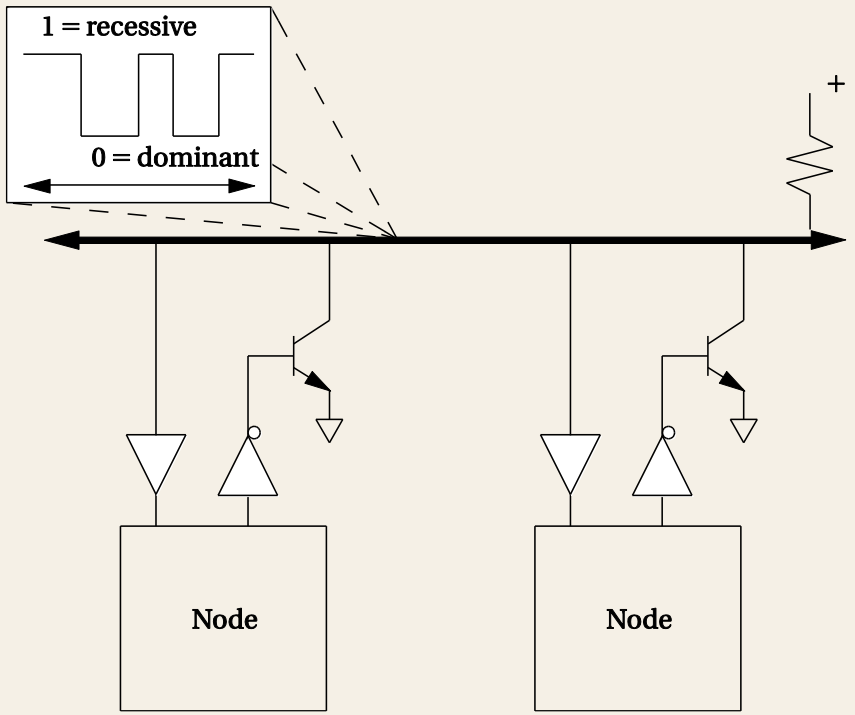

Template designed by Tim Palmer tpalmer@vsu.edu

Embedded System HW Design
Week6
CAN Controller

- Controller implements physical and data link layers

- No network layer needed---bus provides end-to-end connections.

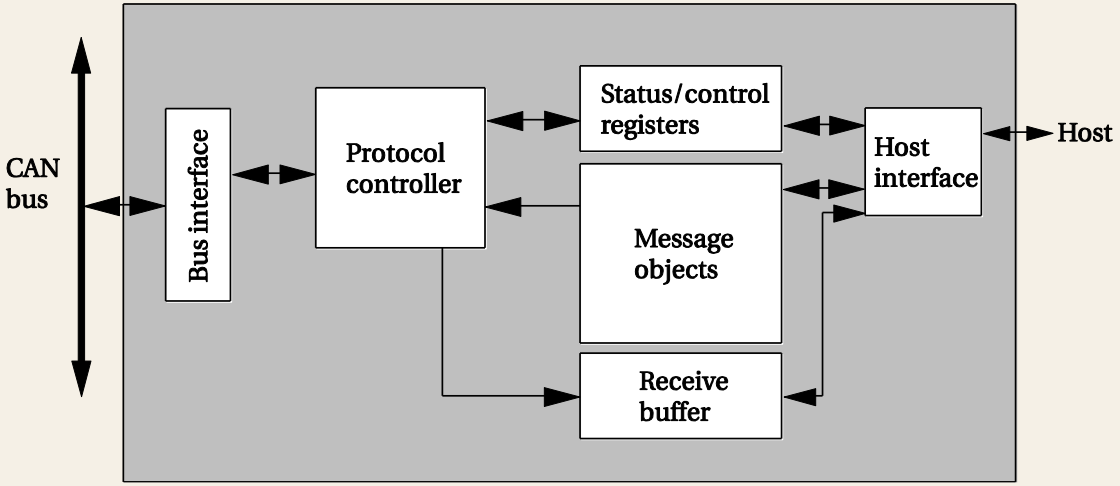

Template designed by Tim Palmer (tpalmer@vt.edu)

Embedded System HW Design
Week6
Other Vehicle Busses

- **Time-triggered architecture (TTA)** assigns communications to time slots

- **FlexRay** is next generation:
  - Time triggered protocol.
  - 10 Mb/s.

- **Local Interconnect Network (LIN)** connects devices in a small area (e.g., door)

- **Passenger entertainment networks**:
  - Bluetooth.
  - Media Oriented Systems Transport (MOST).

Template designed by Tim Palmer, tpalmer@vt.edu

Embedded System HW Design
Week6
Safety and Security

- Vehicles are safety-critical systems

- **Threat models**:
  - Maintenance technicians may introduce problems either maliciously or accidentally.
  - Component suppliers may supply components that don’t work with the system or include malware.
  - Passengers may introduce malware either maliciously or accidentally.
  - Passers-by may connect to vehicle wireless networks.

Template designed by Tim Palmer, tpalmer@vt.edu

Embedded System HW Design
Week6
Car Hacking (1)

- UCSD researchers demonstrated a variety of attacks that allowed them to gain complete control of a car

- **Attack vectors**:
  - Infecting diagnostic computers used by mechanics.
  - Using a specially-coded CD to load malware onto the CD player.
  - Sending signals over the car's telematics connection.

Template designed by Tim Palmer tpalmer@vsu.edu

Embedded System HW Design
Week6
Car Hacking (2)

- CMU researchers demonstrated a takeover of a Jeep Cherokee driven by a journalist

- **Attack vector**:
  - Entered car through telematics systems.
  - Entertainment system was then attacked and modified.
  - Car components did not check the validity of software updates.

- Entertainment system was used to send messages over CAN bus to kill engine, disable brakes.

Template designed by Tim Palmer tpalmer@vt.edu

Embedded System HW Design
Week6
Car Crashes

- Oklahoma court ruled that Toyota was liable in a case of unintended acceleration
  - Electronic throttle control system source code contained 67 functinos with a cyclomatic complexity of over 50; throttle angle function had a cyclomatic complexity of 146.
  - Car’s fail-safe capabilities were both inadequate and defective.

Template designed by Tim Palmer, tpalmer@vt.edu

Embedded System HW Design
Week6
Automotive

- Networked control
- Vehicular networks:
  - CAN.
  - TTP, FlexRay, etc.
- Safety and security.

Template designed by Tim Palmer tpalmer@vt.edu