Key Components in an Embedded System Design

- Processing Element (MCU / MPU / SoC)
- Memory Subsystem
- Power Supply & Power Management
- Sensors (Inputs)
- Actuators (Outputs)
- Communication Interfaces
- Clocking & Timing
- Firmware / Software

Template designed by Tim Palmer, tpalmer@vsu.edu

Key Components in an Embedded System Design

Processing Element (MCU / MPU / SoC)

- Role of the processor as the “brain”
- Differences between MCU, MPU, and SoC
- Typical features inside an MCU:
  - CPU core
  - Flash & RAM
  - Timers
  - ADC/DAC
  - Communication peripherals

Template designed by Tim Palmer tpalmer@vsu.edu

Key Components in an Embedded System Design

Memory Subsystem

- Program memory (Flash)
- Data memory (SRAM)
- Non-volatile storage (EEPROM, external Flash, SD card)
- Why memory type matters (speed, cost, persistence)

Template designed by Tim Palmer, tpalmer@vt.edu

Key Components in an Embedded System Design

Power Supply & Power Management

- Power sources (battery, USB, external supply)
- Voltage regulation (LDO vs switching)
- Power domains
- Decoupling and filtering
- Low-power modes

Template designed by Tim Palmer, tpalmer@vsu.edu

Key Components in an Embedded System Design

Sensors (Inputs)

- Types of sensors:
- Analog vs digital
- Environmental, motion, optical, audio
- Sensor outputs:
- Analog voltage/current
- Digital protocols (I^2C, SPI)
- Where ADC happens (sensor vs MCU)

Example: Temp sensor, accelerometer, MEMS mic on STM32 kit

Key Components in an Embedded System Design

Actuators (Outputs)

- Common examples:
  - Motors
  - Relays
  - LEDs
  - Buzzers
- Why actuators often require drivers or external circuitry
- Digital vs analog control

Template designed by Tim Palmer, tpalmer@vsu.edu

Key Components in an Embedded System Design

Communication Interfaces

- Internal communication (CPU ↔ peripherals)
- External interfaces:
  - UART
  - I²C
  - SPI
  - USB
  - Wireless (BLE, Wi-Fi, Sub-GHz)

Template designed by Tim Palmer, tpalmer@vsu.edu

Key Components in an Embedded System Design

Clocking & Timing

- Internal vs external clocks
- Why timing matters
- Relationship between clock speed, power, and performance
- Timers and interrupts (high-level)

Template designed by Tim Palmer, tpalmer@vsu.edu

Key Components in an Embedded System Design

Firmware / Software

- Firmware as the “glue” between hardware blocks
- Boot process
- Drivers and HALs
- Bare-metal vs RTOS

Template designed by Tim Palmer, tpalmer@vsu.edu

Key Components in an Embedded System Design

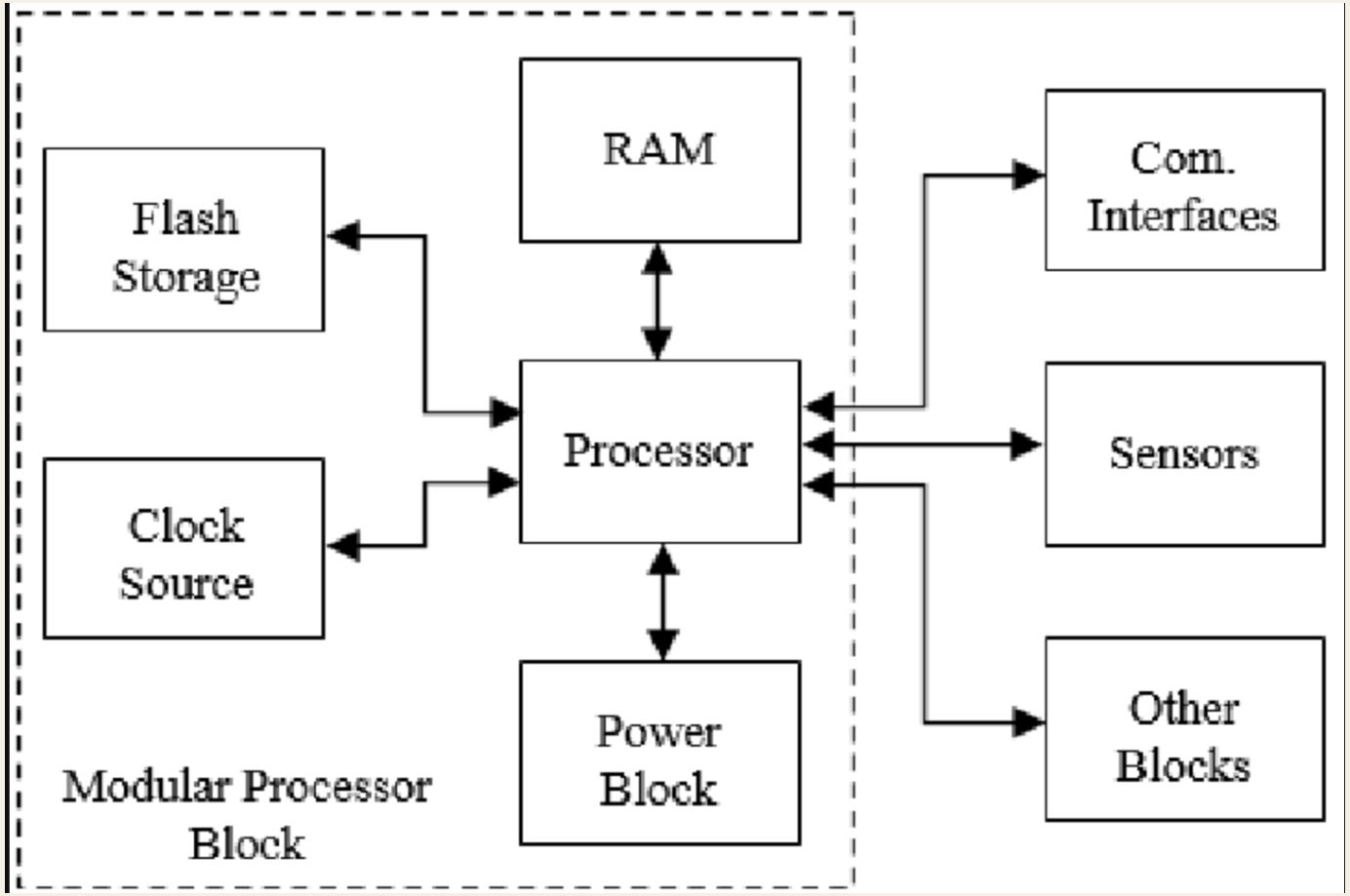

Template designed by Tim Palmer (tpalmer@vt.edu)

Key Components in an Embedded System Design

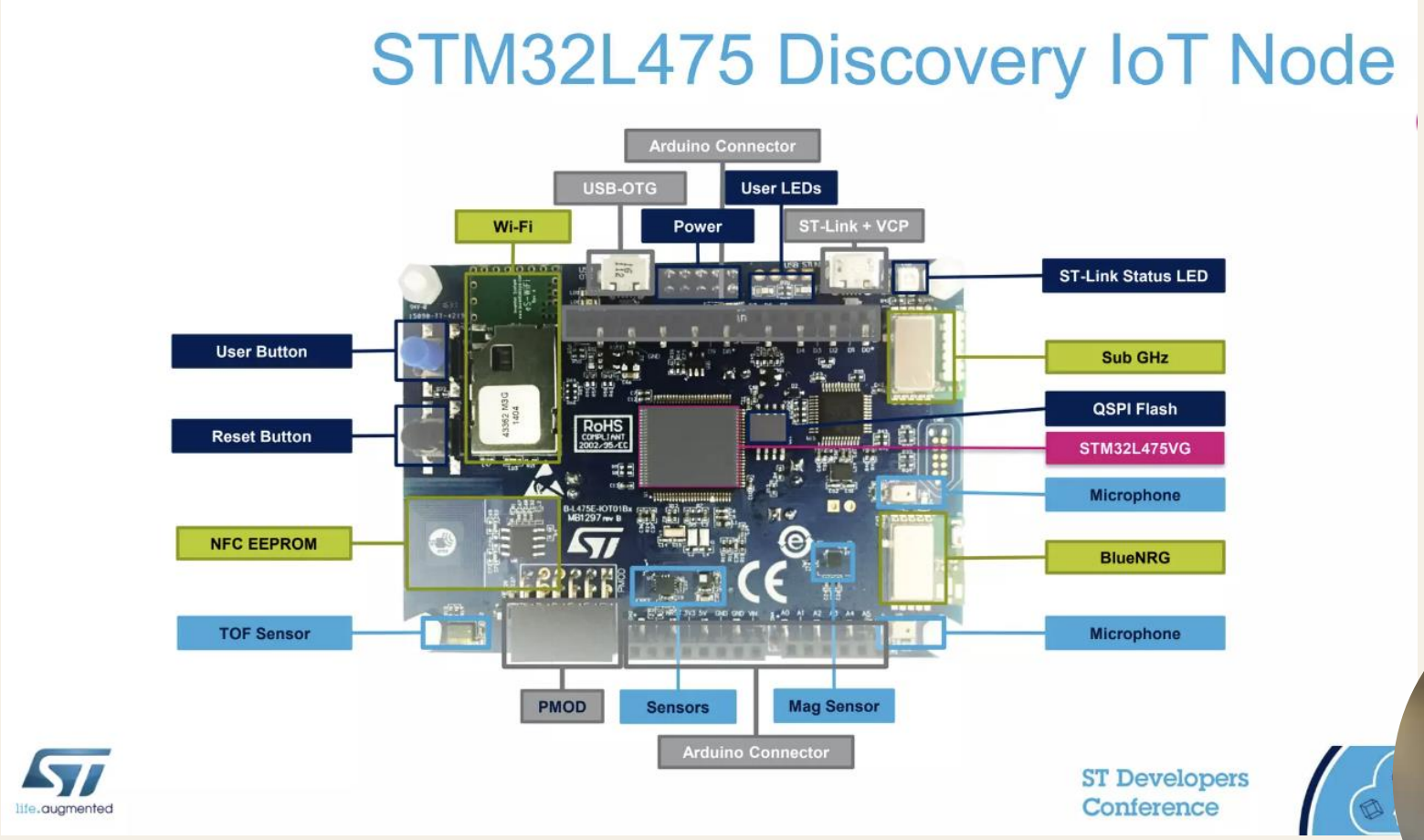

Template designed by Tim Palmer tpalmer@vsed.edu

Introduction to COTS Modules

What are COTS modules

- Definition: pre-built, commercially available hardware modules
- Difference between:
  - Raw components (ICs)
  - COTS modules
  - Custom board designs

- **Examples**
- Wi-Fi modules
- GPS receivers
- IMUs
- Motor driver boards
- Power supply modules

Template designed by Tim Palmer (tpalmer@vt.edu)

Introduction to COTS Modules

Why use COTS modules

- Faster development cycles
- Reduced engineering effort
- Proven and tested designs
- Easier prototyping and validation

- **Industry context**
- Time-to-market pressure
- Small teams vs large teams
- Startup vs enterprise tradeoffs

Template designed by Tim Palmer, tpalmer@vt.edu

Evaluating COTS Modules

- Electrical compatibility
- Communication interface requirements
- Mechanical footprint
- Firmware support & lifecycle
- Tradeoffs & Risk Analysis
- Build vs Buy Decision

Template designed by Tim Palmer, tpalmer@vt.edu

BOM generation

- What Is a BOM(Bill Of Materials)?
  Definition: a complete list of all components required to build a product

  - Typical BOM contents:
    - Reference designator
    - Part number
    - Description
    - Quantity
    - Manufacturer
    - Supplier

Template designed by Tim Palmer tpalmer@vsu.edu

Starting a BOM from System Architecture

- Deriving BOM items from:
  - Block diagrams
  - Subsystems (MCU, power, sensors, RF)
- Top-down vs bottom-up BOM creation
- **Example**
  MCU + regulators + sensors + connectors.

Template designed by Tim Palmer, tpalmer@vsu.edu

Using Reference Designs & Eval Boards

- Leveraging vendor reference BOMs
- Learning from eval board schematics
- Adapting designs—not copying blindly

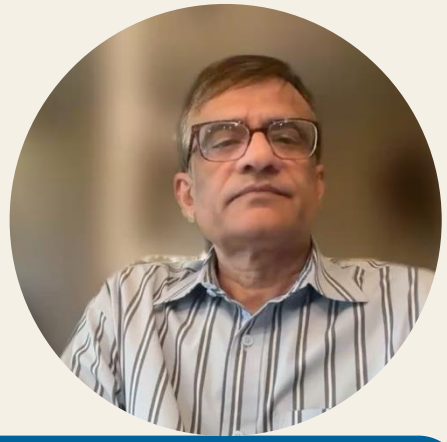

Template designed by Tim Palmer tpalmer@vsu.edu

Tools for BOM Generation

- Schematic capture tools (KiCad, Altium)
- Distributor tools (Digi-Key, Mouser BOM tools)
- Spreadsheet-based BOMs (for prototypes)

Template designed by Tim Palmer, tpalmer@vt.edu

Hardware Selection Criteria

- **Electrical**
  - Voltage/current ratings
  - Power consumption
  - Signal levels
- **Performance**
  - Speed, accuracy, tolerance
  - Environmental limits
- **Mechanical**
  - Package type
  - Size and mounting
  - Thermal considerations
- **Software**
  - Driver availability
  - Vendor support
  - Ecosystem maturity

Template designed by Tim Palmer, tpalmer@vsu.edu

Embedded System HW Design Week2

- Design Methodologies
  - Levels of Abstraction
  - Block Diagrams

- Hardware design essentials
  - Components Embedded System Design
  - COTS module evaluation
  - BOM generation
  - Hardware selection strategies

Template designed by Tim Palmer, tpalmer@vsu.edu