REV	Description	DATE	BY
v1.0	Initial Release	2020-05-20	Ulises
V1.1	Pull down on GPio strech at GND Pull down on reset strech to GND Change pin order on Sensor IO Schematic	2020-05-20	Ulises

Seeed Studio

TITLE: lora gateway sx1302 pcie module v1.1_B48_USB

Designs | Checks

Dates 2020/05/20 Ulises | Visions | Sheets 1/1

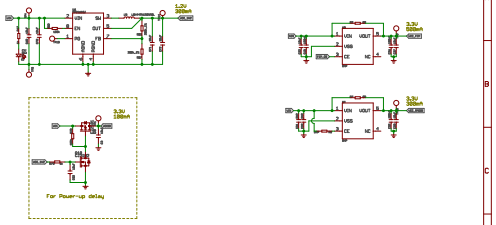

Seeed Studio

TITLE: lora gateway sx1302 pcie module v1.1_B48_USB

Designs | Checks

Dates 2020/05/20 Ulises | Visions | Sheets 1/1

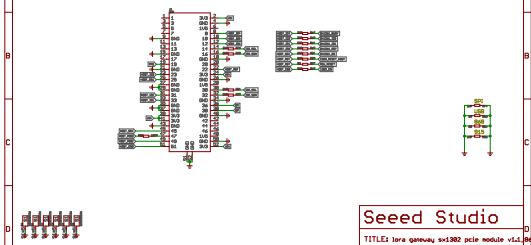

Seeed Studio

TITLE: lora gateway sx1302 pcie module v1.1_B48_USB

Designs | Checks

Dates 2020/05/20 Ulises | Visions | Sheets 1/1

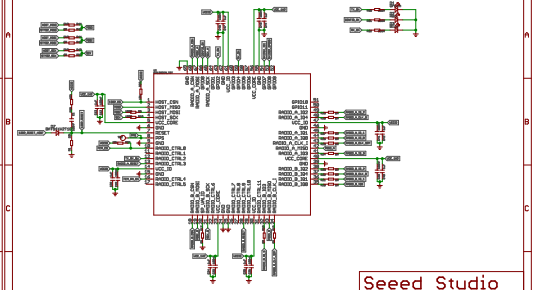

Seeed Studio

TITLE: lora gateway sx1302 pcie module v1.1_B48_USB

Designs | Checks

Dates 2020/05/20 Ulises | Visions | Sheets 1/1

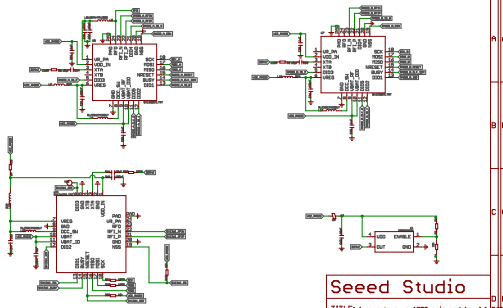

Seeed Studio

TITLE: lora gateway sx1302 pcie module v1.1_B48_USB

Designs | Checks

Dates 2020/05/20 Ulises | Visions | Sheets 1/1

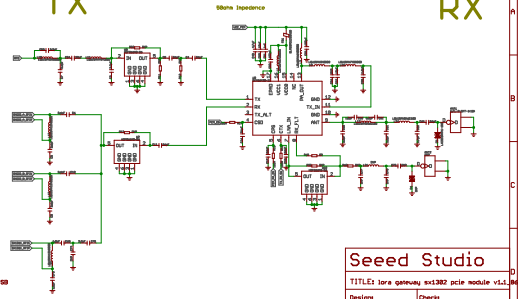

Seeed Studio

TITLE: lora gateway sx1302 pcie module v1.1_B48_USB

Designs | Checks

Dates 2020/05/20 Ulises | Visions | Sheets 1/1

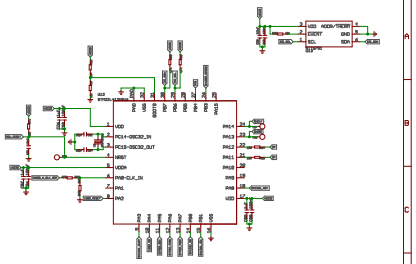

Seeed Studio

TITLE: lora gateway sx1302 pcie module v1.1_B48_USB

Designs | Checks

Dates 2020/05/20 Ulises | Visions | Sheets 1/1