NOTES - (UNLESS OTHERWISE SPECIFIED)

1. ALL DIMENSIONS IN MILLIMETERS.
2. GD&T AS PER ISO1101-2004.

ITEM NO.	PART NUMBER	DESCRIPTION	QTY.
1	I_beam_370L	I-BEAM 370	1
2	I_beam_280L	I-BEAM 280	1
3	tensionbeam	TENSION MEMBER	1

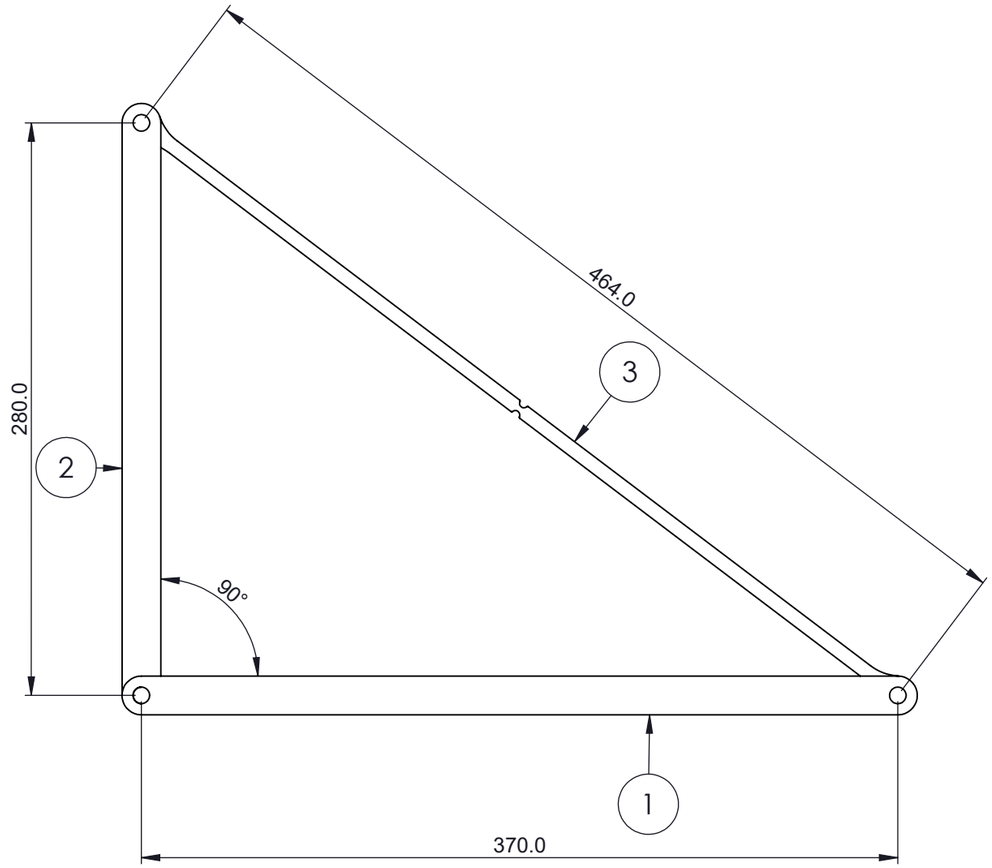

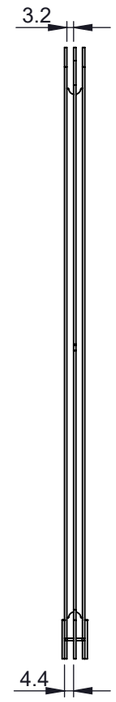

THIRD ANGLE PROJECTION

THIS DOCUMENT IS ISSUED IN STRICT CONFIDENCE ON CONDITION THAT IT IS NOT COPIED, REPRINTED, OR DISCLOSED TO A THIRD PARTY EITHER WHOLLY OR IN PART WITHOUT THE WRITTEN CONSENT OF UNIVERSITY OF CANTERBURY

UNIVERSITY OF CANTERBURY ©
DEPARTMENT OF MECHANICAL ENGINEERING

UNIVERSITY OF CANTERBURY

MATERIAL: SEE PART DRAWINGS

FINISH: SEE PART DRAWINGS

TOLERANCE (UNLESS OTHERWISE SPECIFIED)
DECIMAL mm
.X ± 0.1 .XX ± 0.05 .XXX ± .001 ANG. ± 1°

TRUSS

DESIGN: J CRAWFORD	DWG NO.: 004	REV: REV1
DRAWN: J CRAWFORD	PROJECT: ENME301 ASS. 2	
SUPERVISOR: K ALEXANDER	ISSUE DATE: MAR 21	DRAWING NOT TO SCALE
		SHEET: 1 OF 1

SOLIDWORKS Educational Product. For Instructional Use Only.