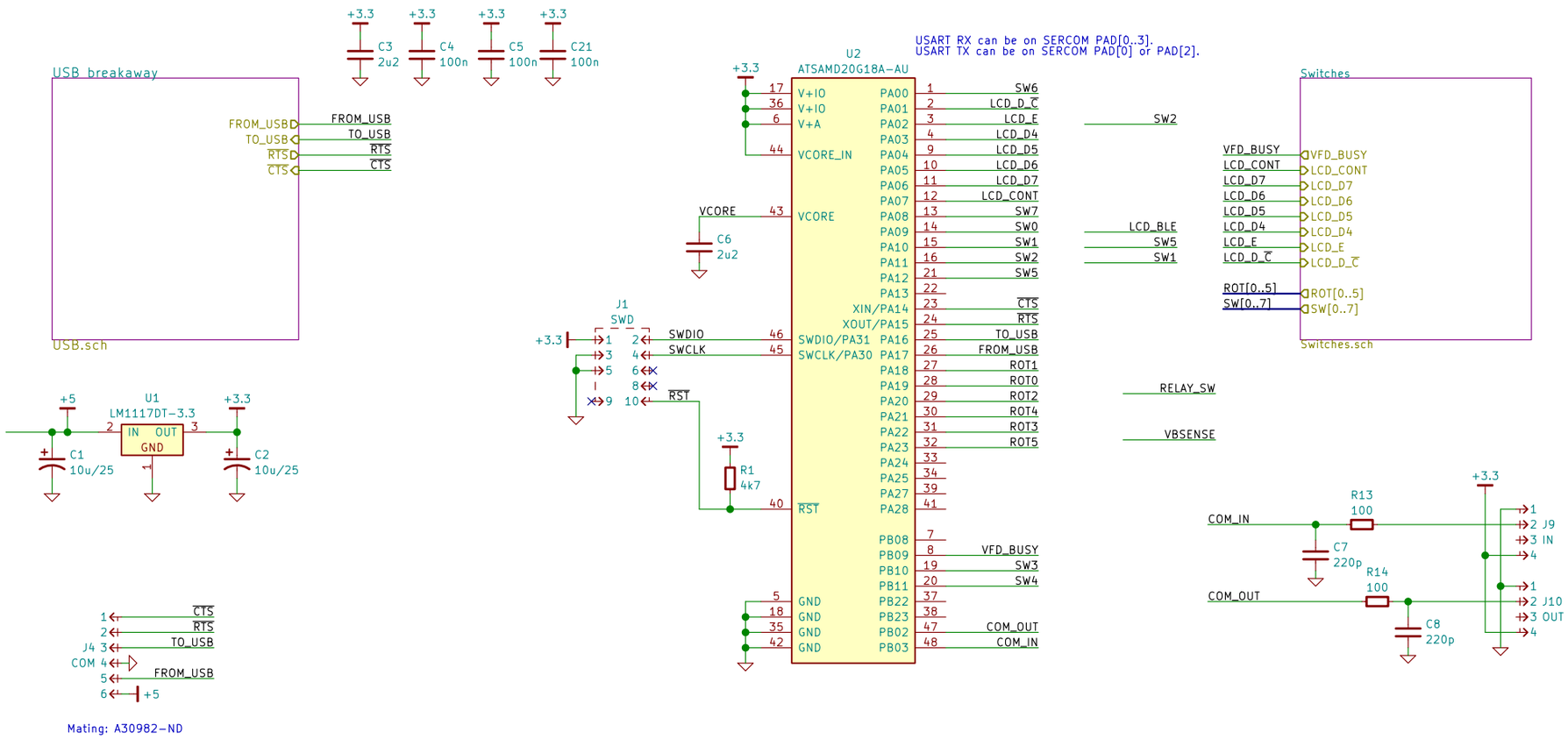

Sheet: /
File: mod1base.sch

Title:

Size: USLegal	Date: 2015-09-12	Rev:
KiCad E.D.A. kicad (2015-10-30 BZR 5793, Git 3ac6522)-product		Id: 1/3

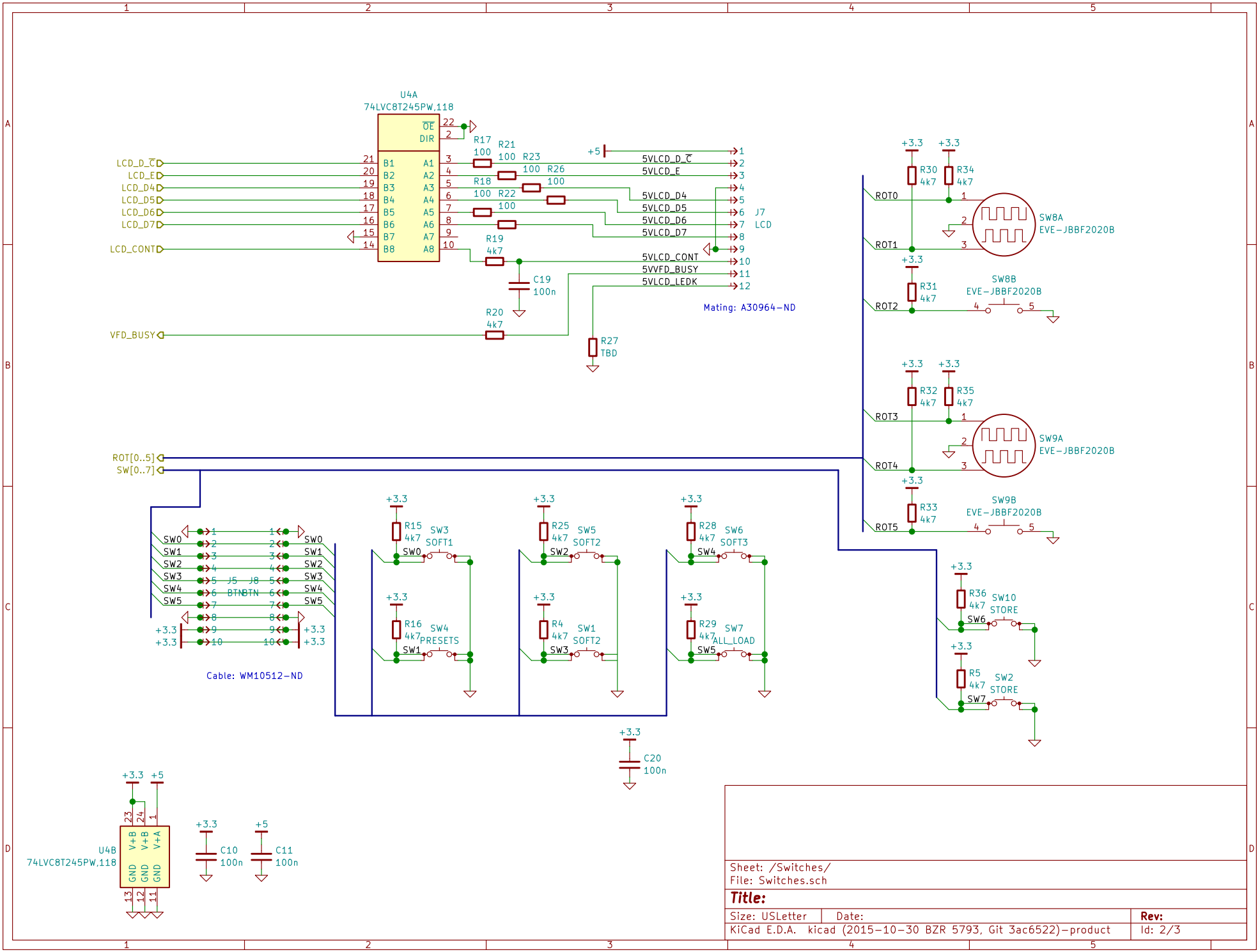

Sheet: /Switches/
File: Switches.sch

Title:

Size: USLetter	Date:	Rev:
KiCad E.D.A. kicad (2015-10-30 BZR 5793, Git 3ac6522)-product		Id: 2/3

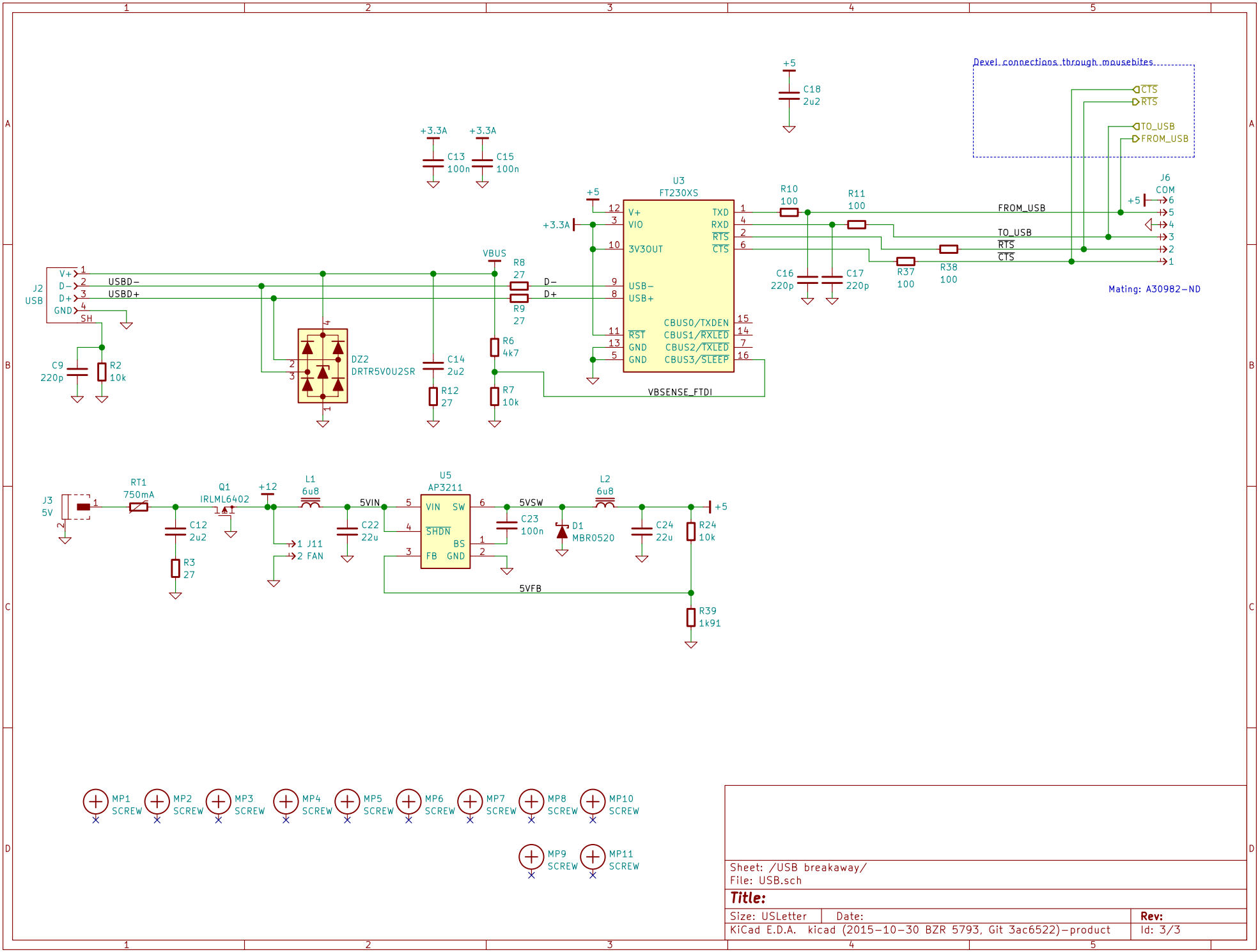

Sheet: /USB breakaway/
File: USB.sch

Title:

Size: USLetter	Date:	Rev:
KiCad E.D.A. kicad (2015-10-30 BZR 5793, Git 3ac6522)-product		Id: 3/3