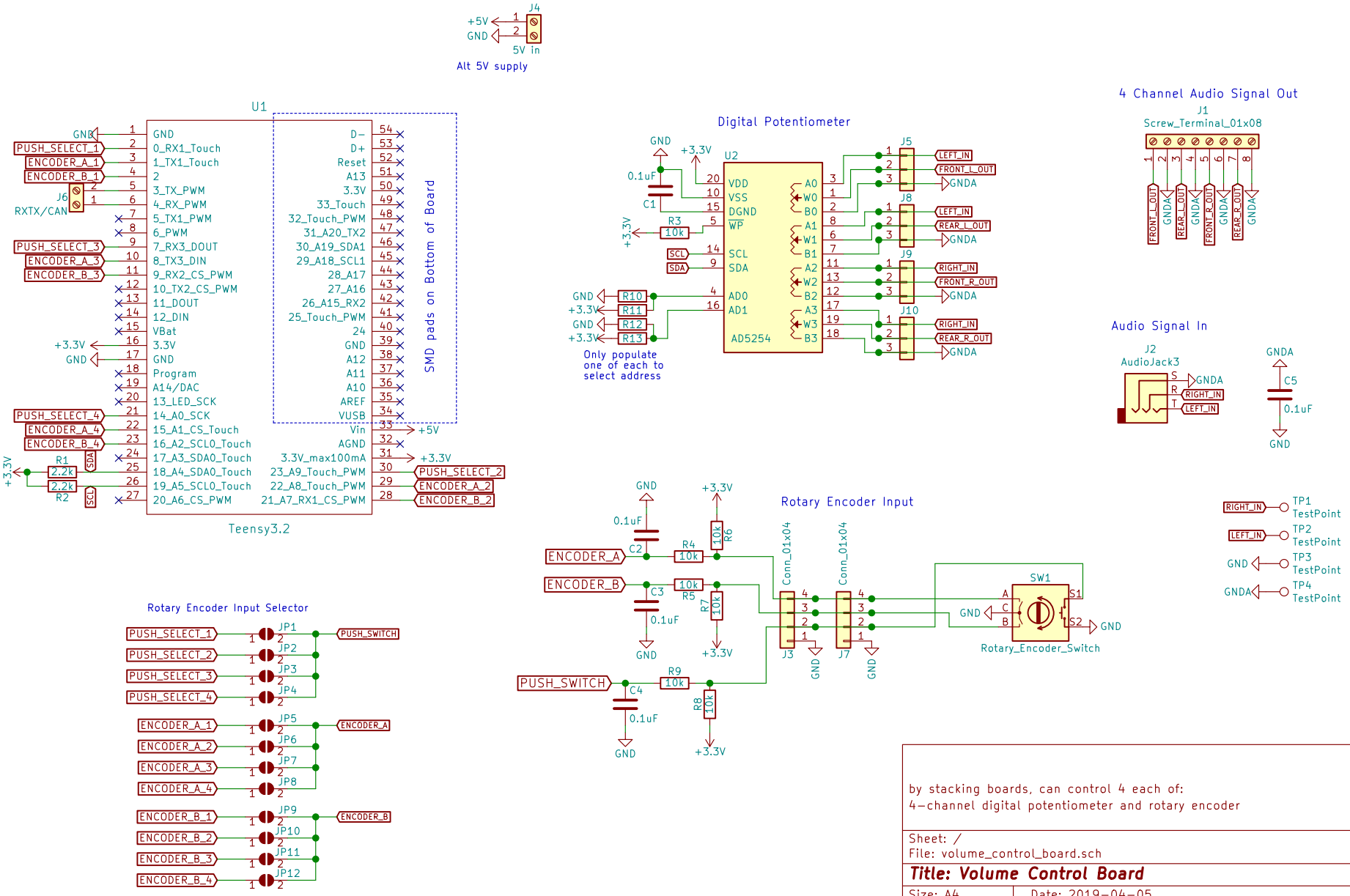

by stacking boards, can control 4 each of:
4−channel digital potentiometer and rotary encoder

Sheet: /
File: volume_control_board.sch

Title: Volume Control Board

Size: A4	Date: 2019−04−05	**Rev: 2**
KiCad E.D.A. kicad 5.0.2−bee76a070ubuntu16.04.1		Id: 1/1