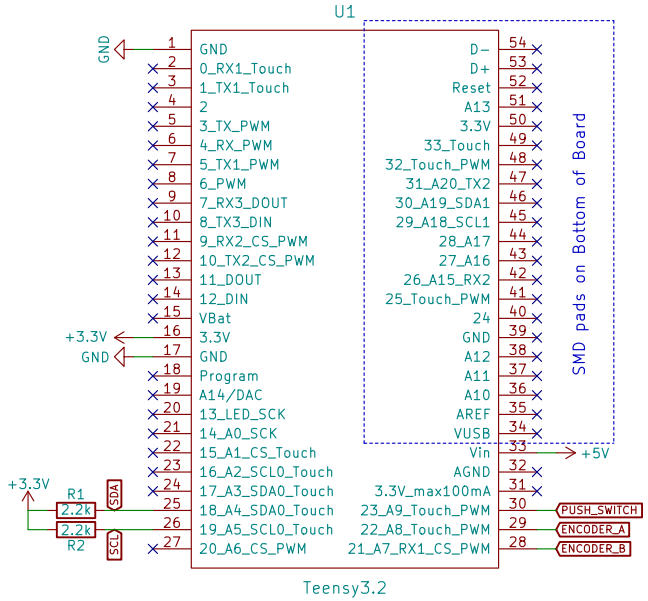


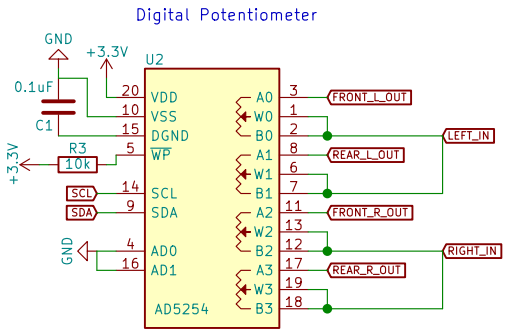


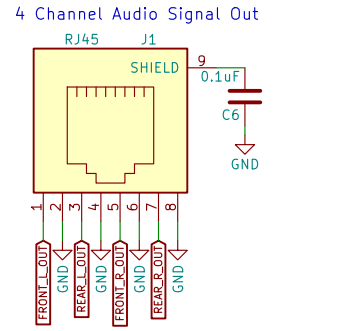


TODO: Should these GND ^ be connected to audio jack sleeve directly?

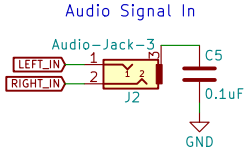


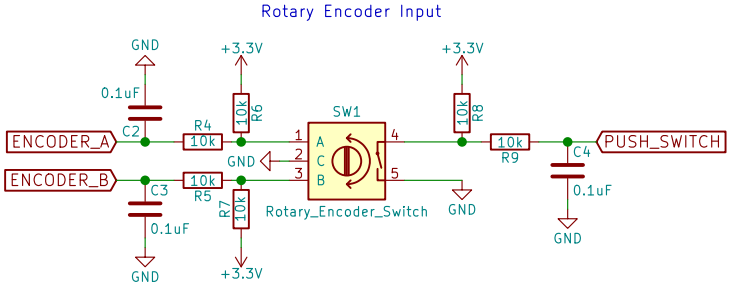


Sheet: /
File: volume_control_board.sch

**Title:**

| Size: A4 | Date: | Rev: |
|---|---|---|
| KiCad E.D.A. kicad 4.0.7−e2−637658ubuntu16.04.1 | | Id: 1/1 |