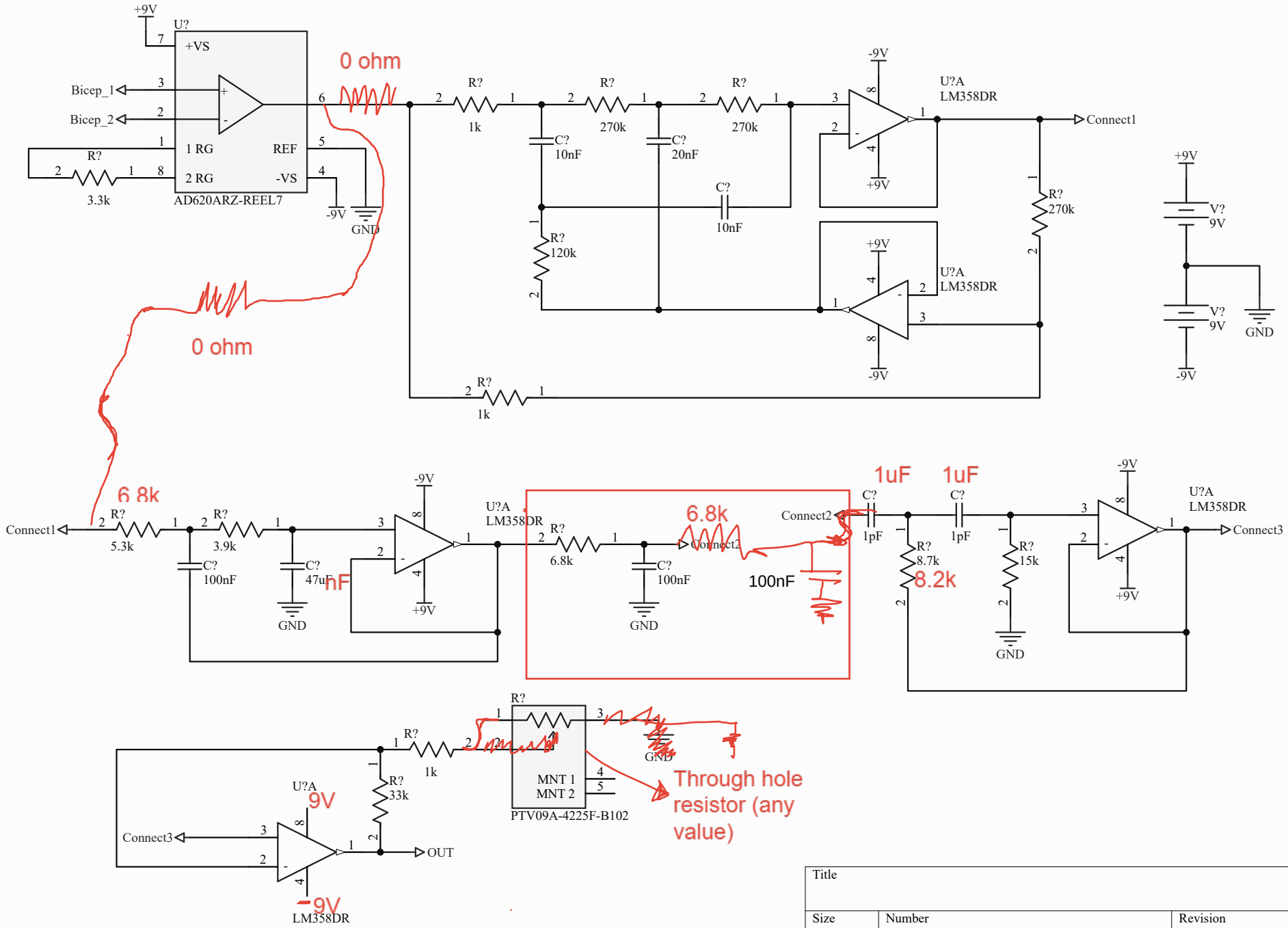

Title		
Size A	Number	Revision
Date: 8/25/2022		Sheet of
File: C:\Users\..\UBC_Best_Harsh_Schematic.SchDoc		Drawn By: