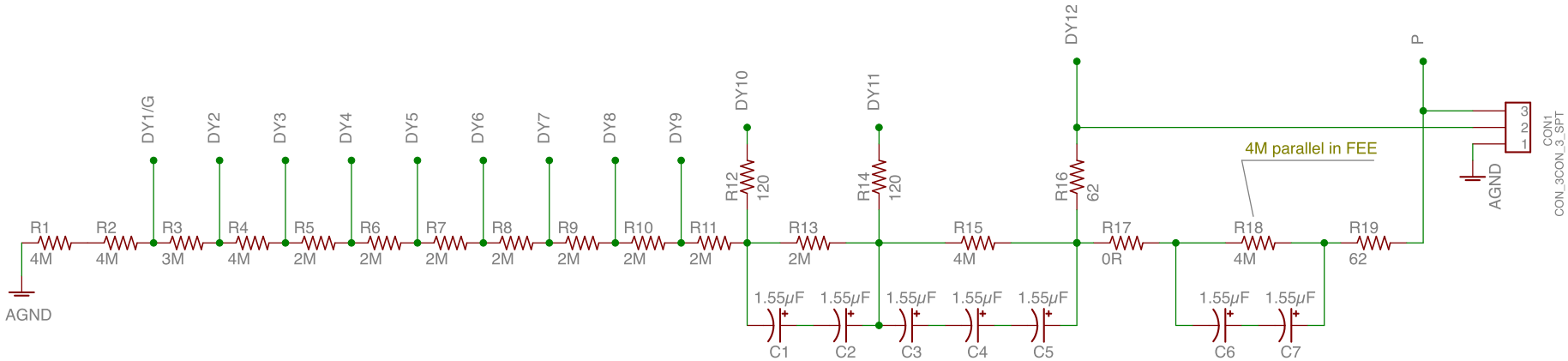

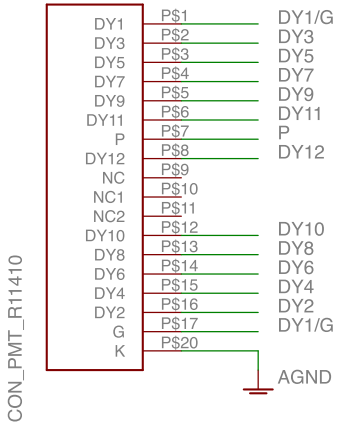

DNP: Do Not Place

TITLE: Differential_base_v5.2		
Document Number:		REV: 0.0
Date: 11/03/16 18:29	Sheet: 1/1	