Xenon TPCs for $\beta\beta0\nu$ searches

J.J. Gómez-Cadenas

April 30, 2026

Abstract

We investigate the potential of xenon time-projection chambers (TPCs) for neutrinoless double-beta decay ($\beta\beta0\nu$) searches.

Introduction

Our initial goal is to reproduce the results obtained by the LZ collaboration in their dedicated $\beta\beta0\nu$ sensitivity study [1], using the detector description provided by the LZ instrument paper [2] and the LZ Technical Design Report [3]. Reproducing the LZ background model serves as a validation of our Monte Carlo machinery before extrapolating to the XLZD design.

1 The LZ Detector

1.1 LZ Cryostat

The LZ liquid-xenon payload is contained in a double-walled titanium cryostat [2, 3]. The Inner Cryostat Vessel (ICV) holds the active LXe and the time-projection chamber; the Outer Cryostat Vessel (OCV) provides the vacuum jacket and supports the ICV through three tie-bar assemblies welded to its top head. Three legs welded to the OCV bottom dished end carry the full assembly and also host shelves for the lower acrylic vessels of the Outer Detector.

The entire cryostat is fabricated from a single 5-tonne slab of ultra-radiopure ASTM Grade 1 titanium (TIMET batch HN3469, EBCH-melted, 0% scrap), from which all plates, flanges, ports, and welding wires were produced. Fabrication was carried out by Loterios (Milan) under ASME BPVC VIII Div. 1.

The ICV has a 2:1 ellipsoidal top head, a cylindrical body that tapers near half-height to reduce the passive LXe layer near the cathode, and a 3:1 ellipsoidal dished bottom (chosen specifically to minimise the LXe volume below the cathode). The vessel is split near the top by a flange pair, and a stiffening ring at the top of the conical section allows thinner walls (6–9 mm in the cylindrical region) while remaining within ASME buckling limits. The OCV is segmented into three flanged pieces (top head, middle cylinder, bottom head) so that each fits in the Yates shaft. The full geometry is shown in Fig. 1.

The bare titanium walls of the ICV and OCV weigh 950 and 1 115 kg respectively (TDR Table 5.4.1). The full cryostat assembly, including all flanges, ports, tie bars, coldhead fins and welded hardware, is taken to be *2 590 kg* for activity-budget purposes, following Table I of the LZ $\beta\beta0\nu$ sensitivity paper [1]; this is the value we adopt for normalisation throughout this work. A summary of dimensions, masses, and the late-chain ^{238}U and ^{232}Th specific activities used in the background model is given in Table 1.

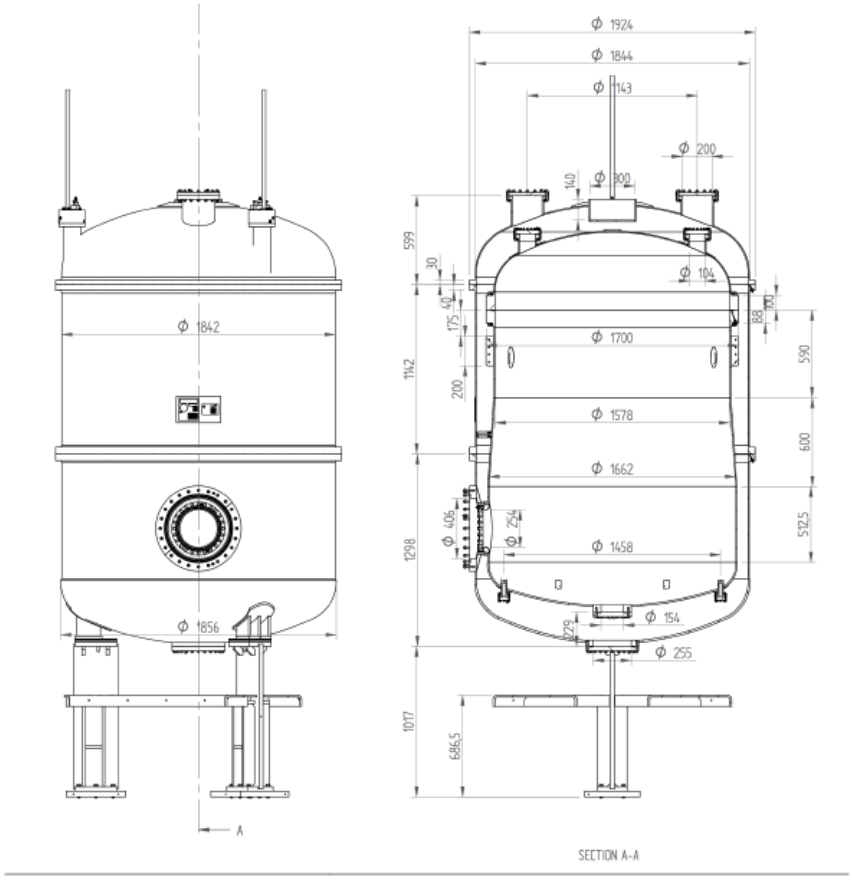

Figure 1: Engineering drawing of the LZ cryostat. Left: external view. Right: section A–A through the assembly, showing the ICV nested inside the OCV. Dimensions in mm.

A Cryostat geometry and mass budget for the simulation

This appendix describes the cryostat representation used in the present simulation. It supersedes the simple-cylinder plus averaged-endcap model that was inherited from earlier LZ analyses, in which the OCV and ICV ellipsoidal heads were lumped into two mass-weighted endcap sources and the missing ~ 1160 kg of hardware mass was absorbed into a single "extra Ti" surface source on the bottom endcap.

A.1 Motivation

Reference [1] (Table I) gives the full Ti cryostat assembly mass as 2 590 kg with late-chain specific activities of 0.08 mBq/kg (^{238}U-late) and 0.22 mBq/kg (^{232}Th-late). To reproduce that paper's background budget the model used here must carry the same total Ti activity, that is, the same total Ti mass at the same specific activity. The TDR's bare-vessel masses (Table 5.4.1 of [3]) are 950 kg (ICV) and 1 115 kg (OCV); a simple-cylinder geometric model with the wall thicknesses of `data/lz_cryo_geometry.csv` gives 1 433 kg for the two vessels combined. The remaining $\sim 1\,160$ kg is real Ti hardware — flanges, ports, support legs, stiffeners, coldhead fins, and internal anchor rings — that the simple-cylinder model omits. The new model places every gram of Ti at a defined geometric location, so each kilogram has a birth point for MC photon emission; nothing is treated as phantom mass.

Table 1: LZ cryostat dimensions, masses and late-chain specific activities. Dimensions labelled "drawing" are read from the engineering drawing in Fig. 1; "TDR" values come from [3], Tables 1.2.1 and 5.4.1; masses and activities of the Ti vessel and insulation are taken from Table I of [1]. UL = upper limit. Values in italics are not separately tabulated in [1] and are retained from the TDR Materials Table 9.2.7 for completeness.

Inner Cryostat Vessel (ICV)	
Quantity	Value
Top neck flange ID	1 143 mm
Upper region (top head) ID	1 700 mm
Upper cylindrical body ID	1 662 mm
Lower cylindrical body ID (after taper)	1 578 mm
Dished-end ID near cathode	1 458 mm
Body ID (TDR cylindrical-section range)	1.58–1.66 m
Height	2.59 m
Wall thickness (top / upper / conical / lower / dished)	7 / 9 / 9 / 9 / 11 mm
Bare vessel mass	950 kg
Outer Cryostat Vessel (OCV)	
Body OD	1 842–1 844 mm
Top flange OD	1 924 mm
Bottom OD (at dished-end ring)	1 856 mm
Inside diameter	1.83 m
Total height	3.04 m
Wall thickness (top / side / dished)	8 / 7 / 14 mm
Bare vessel mass	1 115 kg

Cryostat radioactivity (late-chain only)						
Component	Mass (kg)	$^{238}\mathrm{U}_l$ (mBq/kg)	$^{232}\mathrm{Th}_l$ (mBq/kg)	Total $^{238}\mathrm{U}_l$ (mBq)	Total $^{232}\mathrm{Th}_l$ (mBq)	Source
Ti Cryostat Vessel	2 590	0.08 (UL)	0.22 (UL)	∼207	∼570	[1] Table I
Cryostat Insulation	13.8	11.1	7.79	∼153	∼107	[1] Table I
Cryostat Seals	*33.7*	*26.2*	*4.24*	*∼883*	*∼143*	*TDR Table 9.2.7*
Cryostat Teflon Liner	*26*	*0.02*	*0.03*	*∼0.5*	*∼0.8*	*TDR Table 9.2.7*

A.2 Geometry primitives

Two pure-geometry types are introduced. `GCyl` is a cylindrical shell with axis along $\hat{z}$, characterized by inner radius R_i, radial wall thickness t, and axial extent $[z_{\min}, z_{\max}]$. `GDisk` is a head/disc attached to a cylinder of equatorial radius R at axial position z_{eq}, with shape parameter n (the head depth equals R/n; $n = \infty$ is a flat disc, $n = 1$ a hemisphere, $n = 2$ a 2:1 ellipsoidal head, $n = 3$ a 3:1 head) and an outward direction (↑ or ↓). Both types expose a uniform interface — area, volume, mass given a material density, uniform-on-surface point sampling, inward normal, and ray path-length through the shell — used both by the analytic shielding integrals and by the per-photon Monte Carlo.

A.3 Cryostat composition

The composite `Cryostat` object is built from two CSV files. The geometry file `data/lz_cryo_geometry.csv` contains two rows (OCV and ICV) with the radius, total height, cylindrical-section height, wall and head thicknesses, and head aspect ratios; each row generates one `GCyl` (the cylindrical body) and two `GDisk` (top and bottom heads). The extras file `data/lz_cryo_extras.csv` contains 22 rows representing all the additional Ti hardware identified from the LZ-TDR [3] and from the engineering drawing (`docs/cryostat.png`). Each extras row encodes an annular `GCyl` together with a category label, a multiplicity `count` (for items that appear N times at different azimuths,

such as the three OCV legs or the six coldhead fins), and a flag `include_in_mc` that selects whether the row is used as a γ-source ring in the Monte Carlo.

The 22 extras break down by category as: 5 flanges, 8 port entries (12 individual pieces), 1 support-leg entry (3 pieces), 1 stiffener, 1 coldhead-fin entry (6 pieces), and 5 internal-anchor-ring entries.

A.4 Mass budget

Computed with $\rho_{\mathrm{Ti}} = 4.510$ g/cm^3:

Table 2: Ti mass budget of the cryostat model. Categories beyond the barrels and heads are read from `data/lz_cryo_extras.csv`.

Category	Mass (kg)
Barrels (OCV + ICV)	791
Heads (4 ellipsoidal)	642
Flanges (5 entries)	606
Ports (8 entries, 12 pieces)	121
Legs (3 pieces)	122
Stiffener	26
Coldhead fins (6 pieces)	57
Internal anchor rings (10 pieces)	208
Total Ti mass (model)	**2 572**
bb0nu Table I [1]	2 590
Residual (model − bb0nu)	−18 kg (−0.7%)

The agreement with [1] is at the 1% level. The test `test/test_geometry2.jl` regresses against ±5% tolerance.

A.5 Radioactive (MC-active) subset

Not all of the 22 extras are exposed as MC sources. Items whose geometry does not fit the axisymmetric `GCyl` primitive cleanly (the three OCV legs are off-axis), or which are buried inside other Ti walls (internal anchors, the ICV stiffening ring, the six coldhead fins), or which are small enough that their contribution to the fiducial volume is sub-percent (the weir drains, the ICV bottom anchor port flanges, the OCV bottom small port) are flagged `include_in_mc = false`. The radioactive model comprises the barrels, the four heads, the five flanges, and the six main ports (HV port, cathode-side port, YBe recess, conduit ports, tie-bar ports, and bottom umbilical), totalling 2 144 kg — 83% of the full Ti budget. The remaining 17% (428 kg) consists almost entirely of items that are heavily shielded or geometrically hidden, so its contribution to the FV background is expected to be considerably less than 17%.

A.6 Conventions and caveats

Lengths in cm, masses in kg, $z = 0$ at the cathode (TPC drift region $z \in [0, 145.6]$ cm). Cylindrical-shell volumes use the exact formula $\pi(R_o^2 - R_i^2)\,H$; head volumes use the thin-shell approximation $A_{\mathrm{inner}} \times t$, with relative error $\mathcal{O}(t/R) \approx 1\%$ at LZ scales. Flange axial thicknesses and most port axial extents are estimates from ASME-typical values for Ti at 1.8 m diameter / 2 bar internal pressure: the engineering drawing gives reliable diameters but not flange thicknesses. The two side ports (HV, cathode-side) have axes perpendicular to $\hat{z}$ and are encoded as thin annular rings at the OCV body radius — a representation that conserves mass and places the source at the correct (R, z) but does not capture the radial port axis. Items appearing N times at different azimuths share one CSV row with `count` $= N$; the loader produces N copies at the same (R, z), which is exact for axisymmetric mass and shielding integrals.

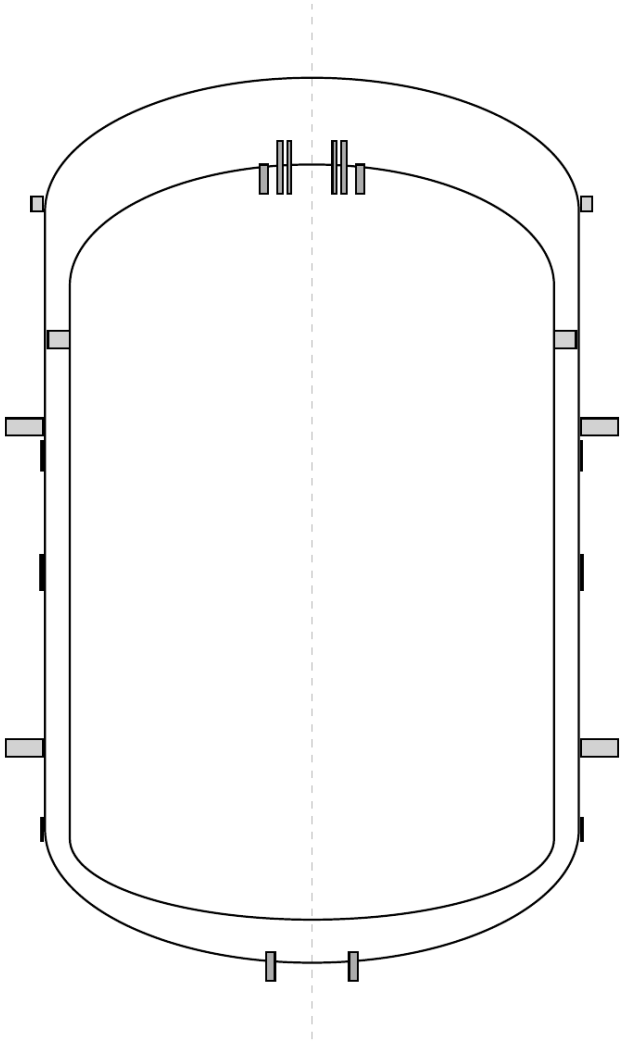

Figure 2: Section view of the LZ cryostat radioactive model: the two outer contours (OCV with 2:1 top and 2:1 bottom; ICV with 2:1 top and 3:1 bottom), the five flanges (light fill), and the six main ports (darker fill). MC-inactive structural elements (legs, stiffener, coldhead fins, internal anchor rings, weir drains, ICV anchor port flanges, OCV bottom small port) are intentionally omitted.

References

[1] LZ Collaboration, *Projected sensitivity of the LUX-ZEPLIN experiment to the* $0\nu\beta\beta$ *decay of* ^{136}Xe, Phys. Rev. C **102**, 014602 (2020), arXiv:1912.04248.

[2] LZ Collaboration, *The LUX-ZEPLIN (LZ) experiment*, Nucl. Instrum. Meth. A **953**, 163047 (2020), arXiv:1910.09124.

[3] LZ Collaboration, *LUX-ZEPLIN (LZ) Technical Design Report*, arXiv:1703.09144 (2017).