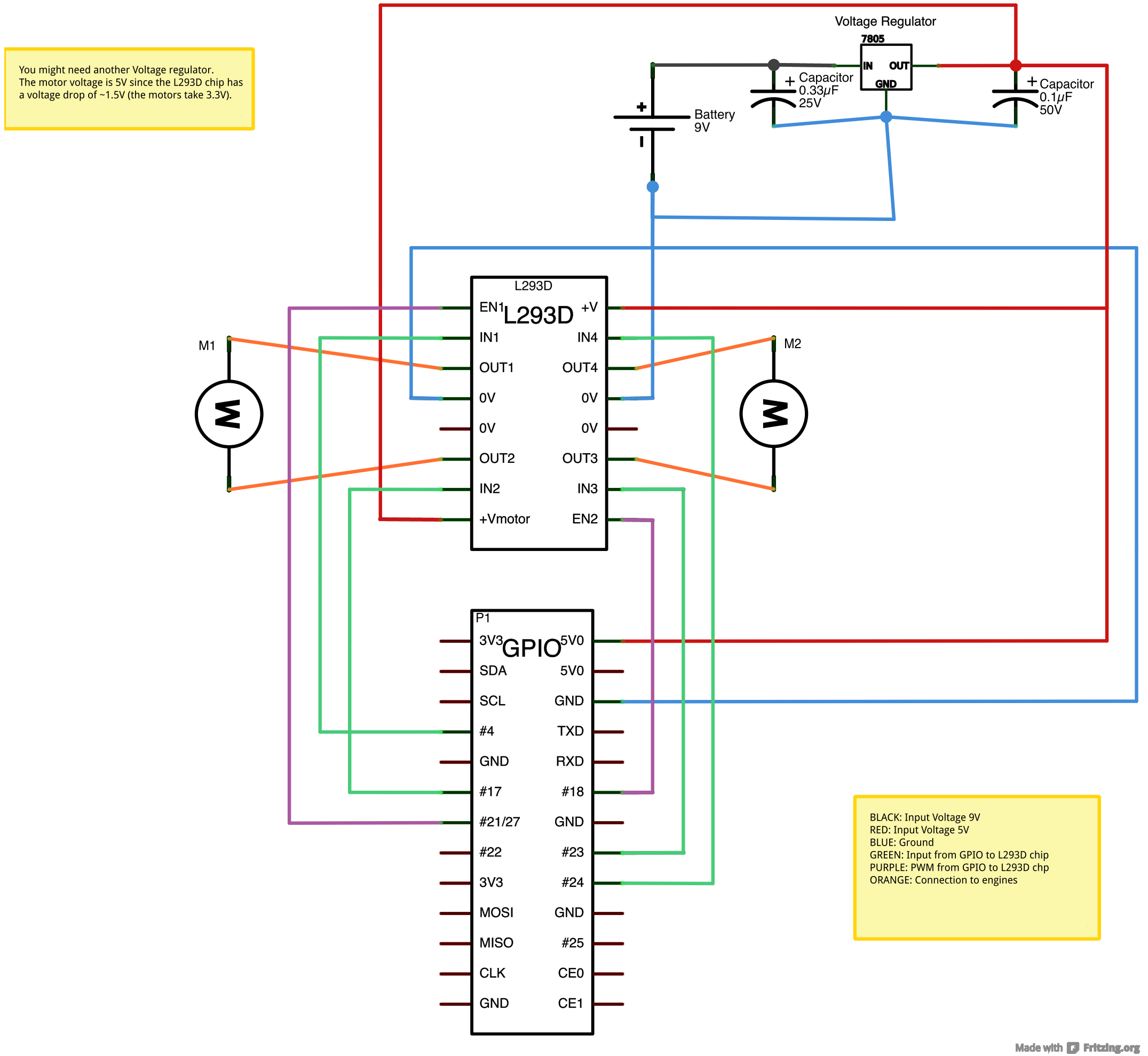
You might need another Voltage regulator.
The motor voltage is 5V since the L293D chip has a voltage drop of ~1.5V (the motors take 3.3V).
Voltage Regulator
7805
IN
OUT
GND
+ Capacitor
0.33μF
25V
+ Capacitor
0.1μF
50V
Battery
9V
L293D
EN1
+V
IN1
IN4
OUT1
OUT4
0V
0V
0V
0V
OUT2
OUT3
IN2
IN3
+Vmotor
EN2
M1
M2
P1
3V3
5V0
SDA
5V0
SCL
GND
#4
TXD
GND
RXD
#17
#18
#21/27
GND
#22
#23
3V3
#24
MOSI
GND
MISO
#25
CLK
CE0
GND
CE1
BLACK: Input Voltage 9V
RED: Input Voltage 5V
BLUE: Ground
GREEN: Input from GPIO to L293D chip
PURPLE: PWM from GPIO to L293D chp
ORANGE: Connection to engines
Made with Fritzing.org