ASIAN INSTITUTE OF MANAGEMENT

Machine Learning 3

RNN Fundamentals

Session 9 and 10

MSDS 2026

08 May 2026

ASIAN INSTITUTE OF MANAGEMENT

Class Administrative Matters

Course Schedule

Session 9 and 10 (May 8) – RNN Fundamentals

Session 11 and 12 (May 11) – RNN Application: Time Series Forecasting

Session 13 and 14 (May 13) – RNN Application: NLP

Session 15 and 16 (May 21) – Transformers Architecture

Session 17 and 18 (May 25) – Journal Scan Presentation

Session 19 and 20 (May 29) – Final Exam

Class Administrative Matters

Course Schedule

Final Project Consultations and Mock Presentations (???)

Final Project Public Presentation (June 2)

Session 9 and 10 – RNN Fundmentals

Gameplan

Session 9

Introduction to RNNs: Sequential Data

Backpropagation in RNNs

Session 10

Backpropagation in RNNs (Worked Example)

RNN Fundamentals I

RNN Fundamentals I

Sequential Data

Sequential data is a type of data in which elements appear in a certain order and are not independent of each other.

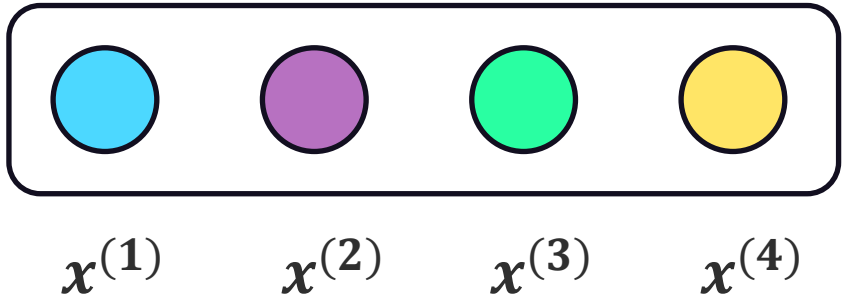

Examples: text data, time-series data, audio signal

RNN Fundamentals I

Sequential Data

What are examples of problems or tasks that involve **sequential data?**

RNN Fundamentals I

Sequential Modeling

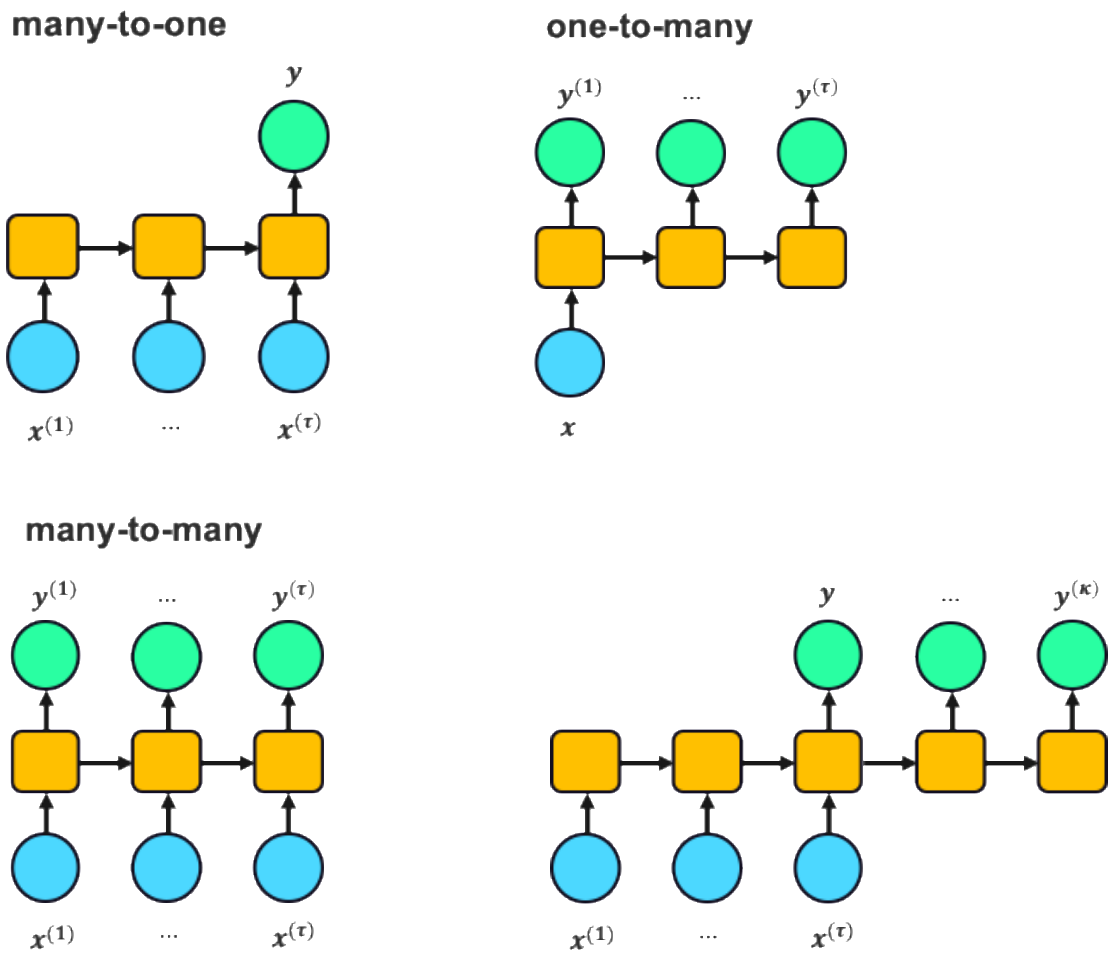

RNN Fundamentals I

CNN Fundamentals: Review

Key Idea of CNNs

- Recognize local patterns
- Translation invariant
- Learn spatial hierarchies of patterns
- Parameter sharing

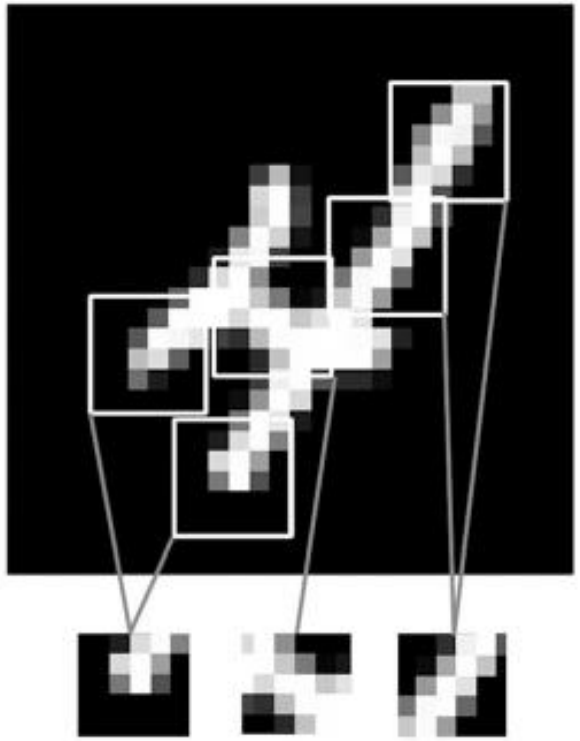

RNN Fundamentals I

Sequential Modeling

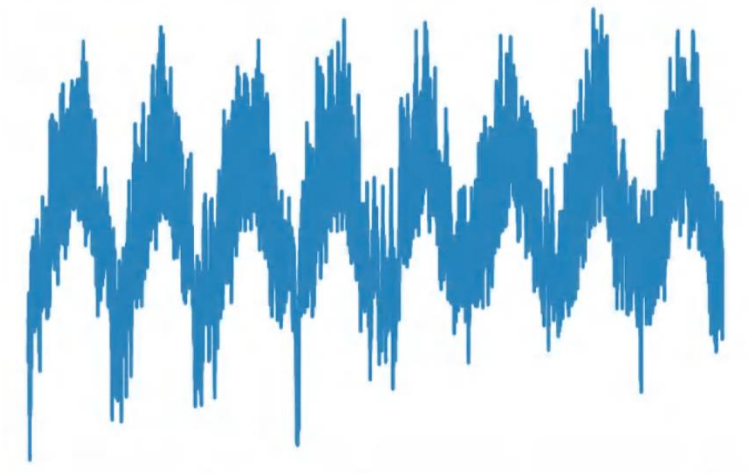

timescale (8-years)

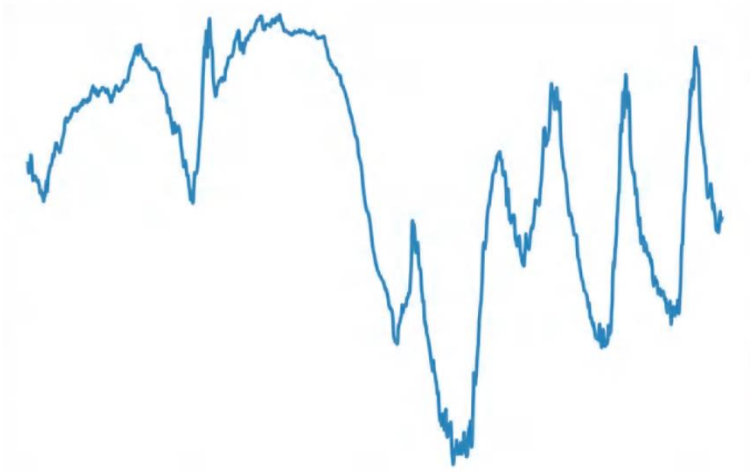

timescale (10 days)

For modeling sequential data, we need a representation that can handle the *order* of the input samples, and has a *memory* of past seen examples

RNN Fundamentals I

Sequential Modeling

Time-series Forecasting: Jena Climate Dataset

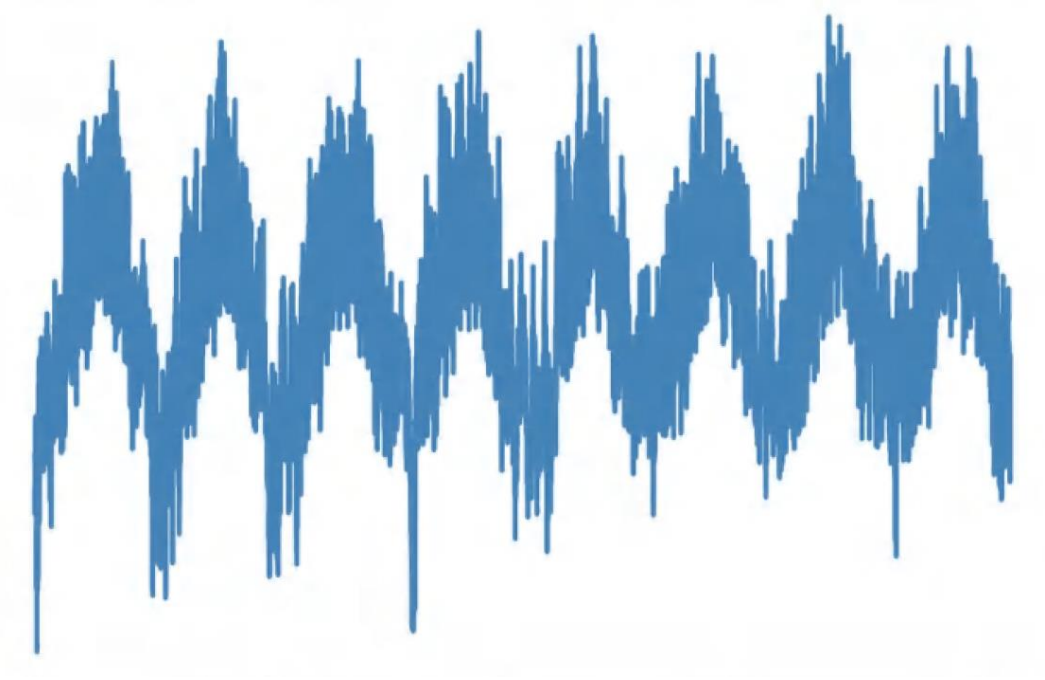

Model	MAE
Naïve Baseline	2.62 ºC
Dense NN	2.71 ºC
CNN	3.31 ºC
RNN (LSTM)	2.57 ºC

RNN Fundamentals I

Simple RNN Architecture

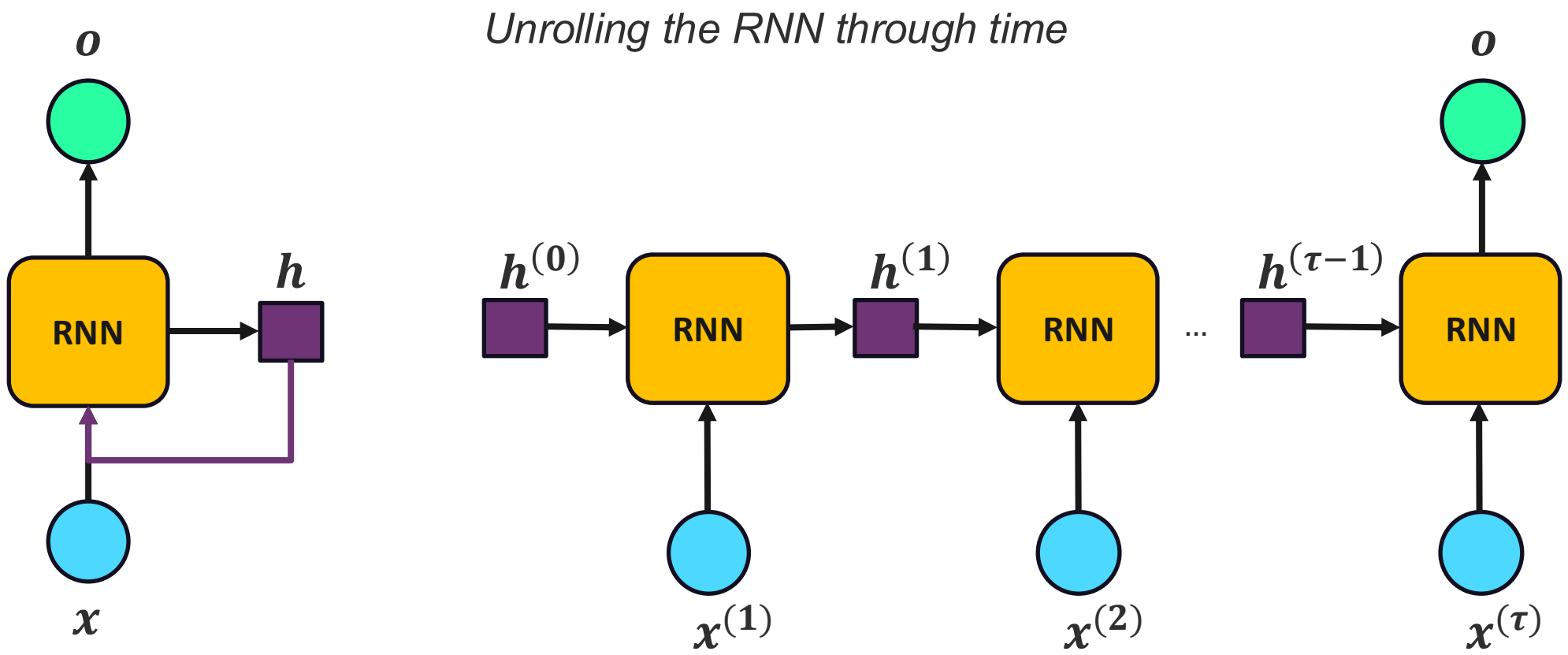

RNN Fundamentals I

Simple RNN Architecture

Let $\boldsymbol{h}^{(0)} \in \mathbb{R}^d$ be the initial hidden state,

$\boldsymbol{h}^{(t)}$ is the hidden state that stores information from $\boldsymbol{x}^{(1)}$ to $\boldsymbol{x}^{(t)}$,

$$\boldsymbol{h}^{(t)} = g\left(\boldsymbol{W}\boldsymbol{h}^{(t-1)} + \boldsymbol{U}\boldsymbol{x}^{(t)} + \boldsymbol{b}\right)$$

$$\boldsymbol{W} \in \mathbb{R}^{d\times d},\ \boldsymbol{U} \in \mathbb{R}^{d\times d_{in}},\ \boldsymbol{b} \in \mathbb{R}^d$$

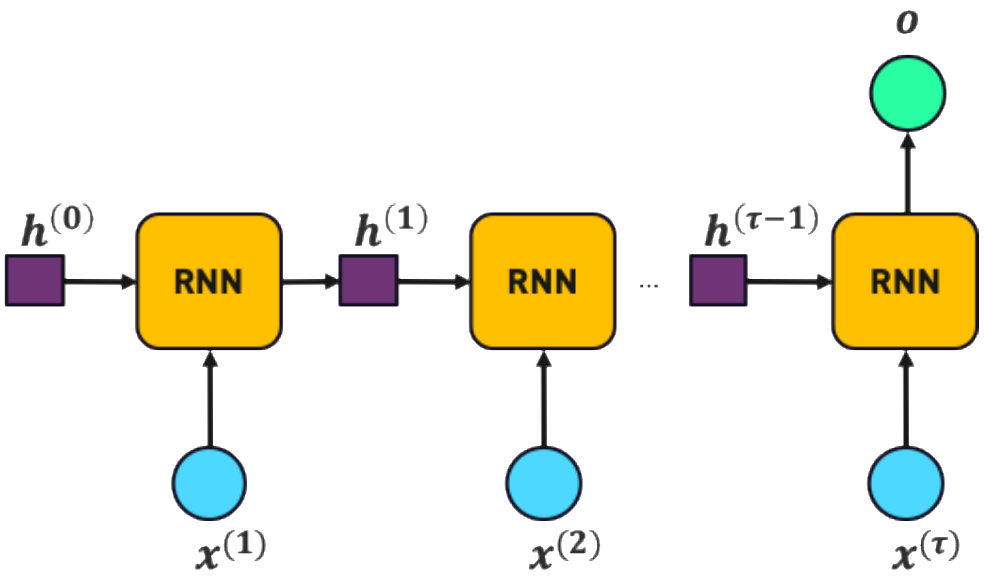

RNN Fundamentals I

Dense NN vs Simple RNN

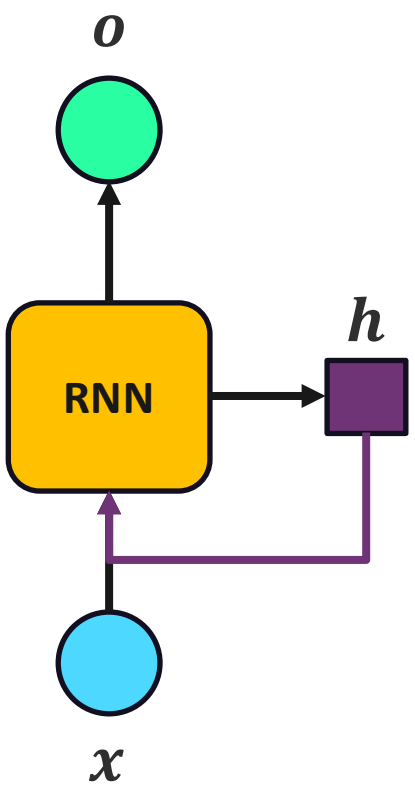

RNN Fundamentals I

Dense NN vs Simple RNN

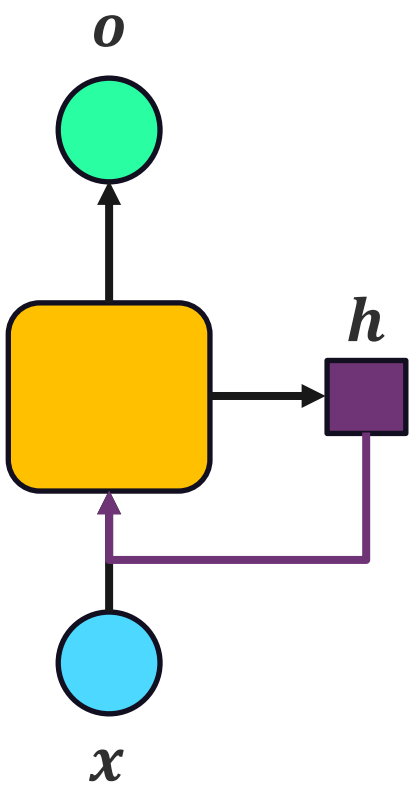

RNN Fundamentals I

Dense NN vs Simple RNN

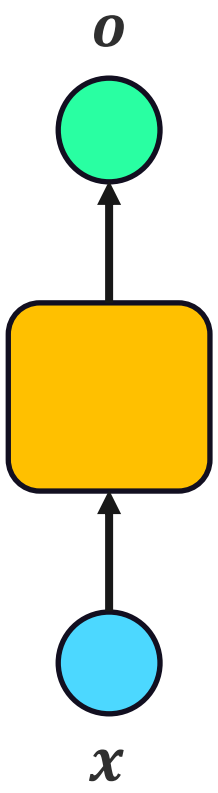

RNN Fundamentals I

Dense NN vs Simple RNN

Dense NN

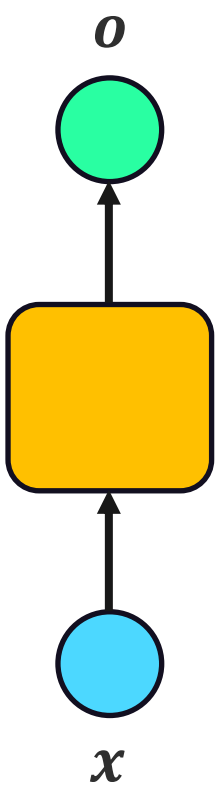

Simple RNN

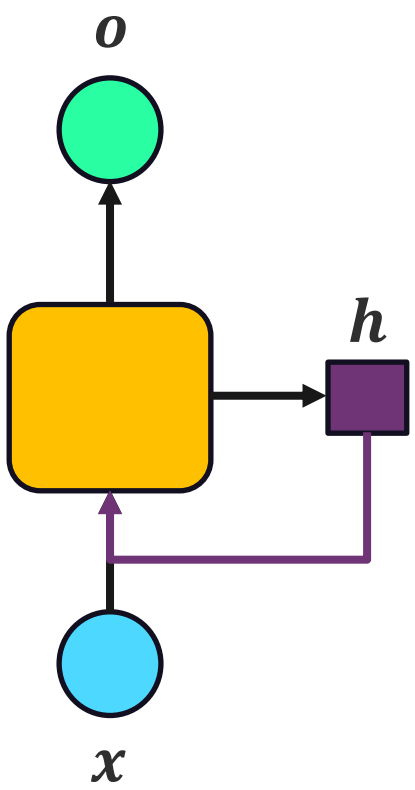

RNN Fundamentals I

Dense NN vs Simple RNN

Fully Connected Layer

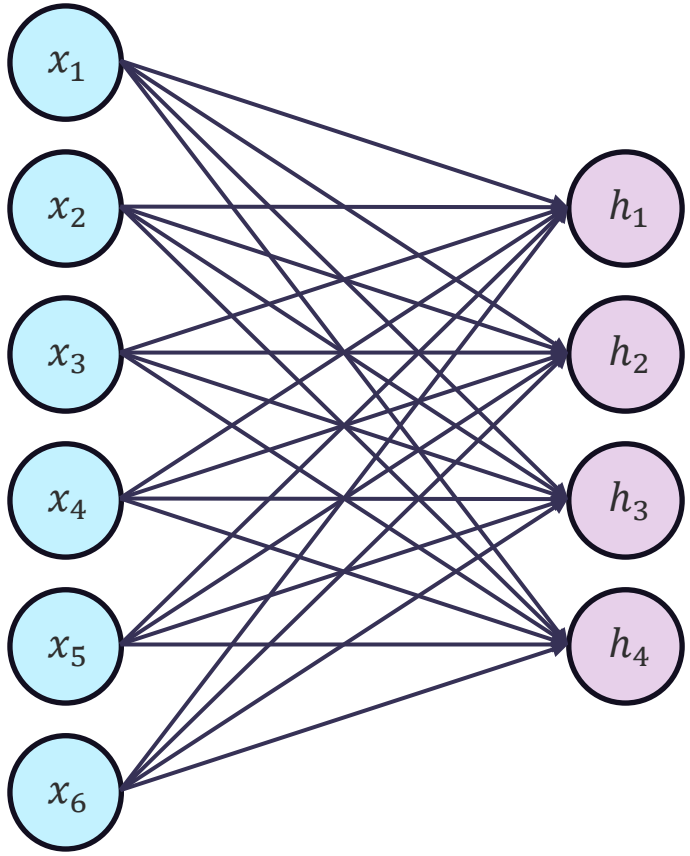

For a given fully connected layer with **six input nodes** and **four hidden nodes** will have a corresponding **24 (plus 4) weight** parameters.

RNN Fundamentals I

Dense NN vs Simple RNN

Fully Connected Layer

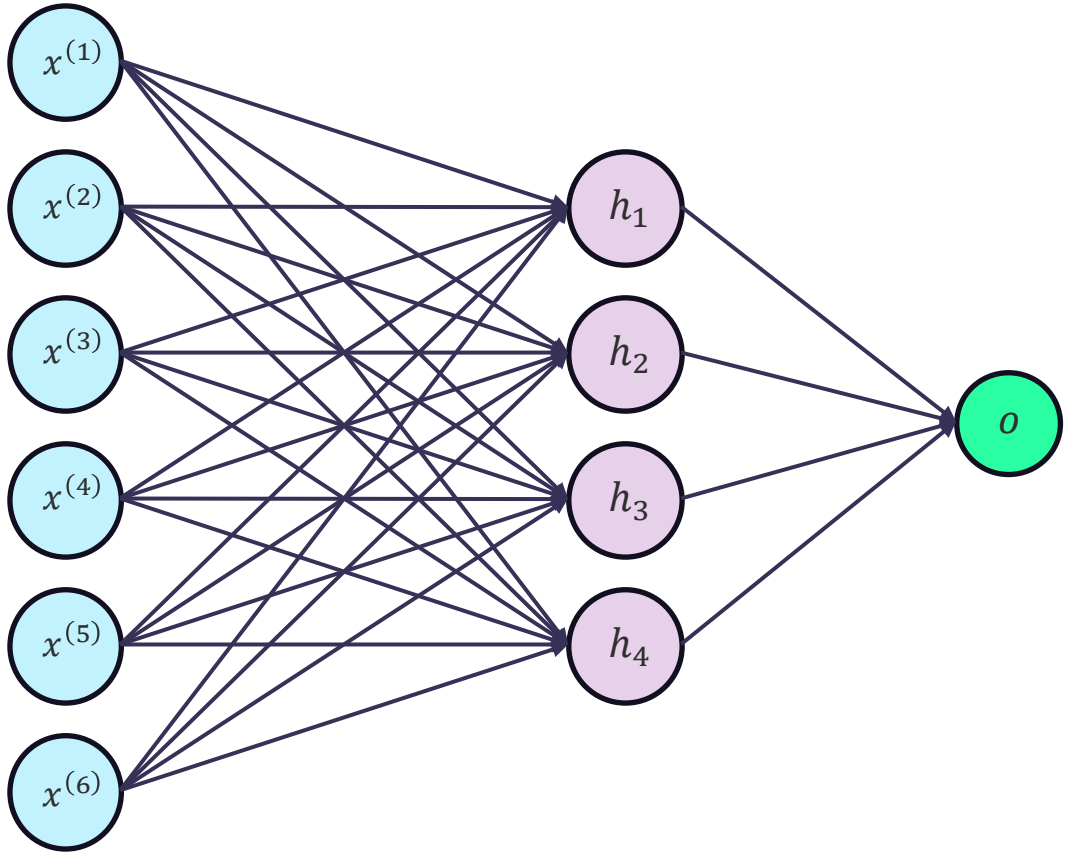

RNN Fundamentals I

Dense NN vs Simple RNN

Simple RNN $\boldsymbol{h}^{(t)} = g\left(\boldsymbol{W}\boldsymbol{h}^{(t-1)} + \boldsymbol{U}\boldsymbol{x}^{(t)} + \boldsymbol{b}\right)$

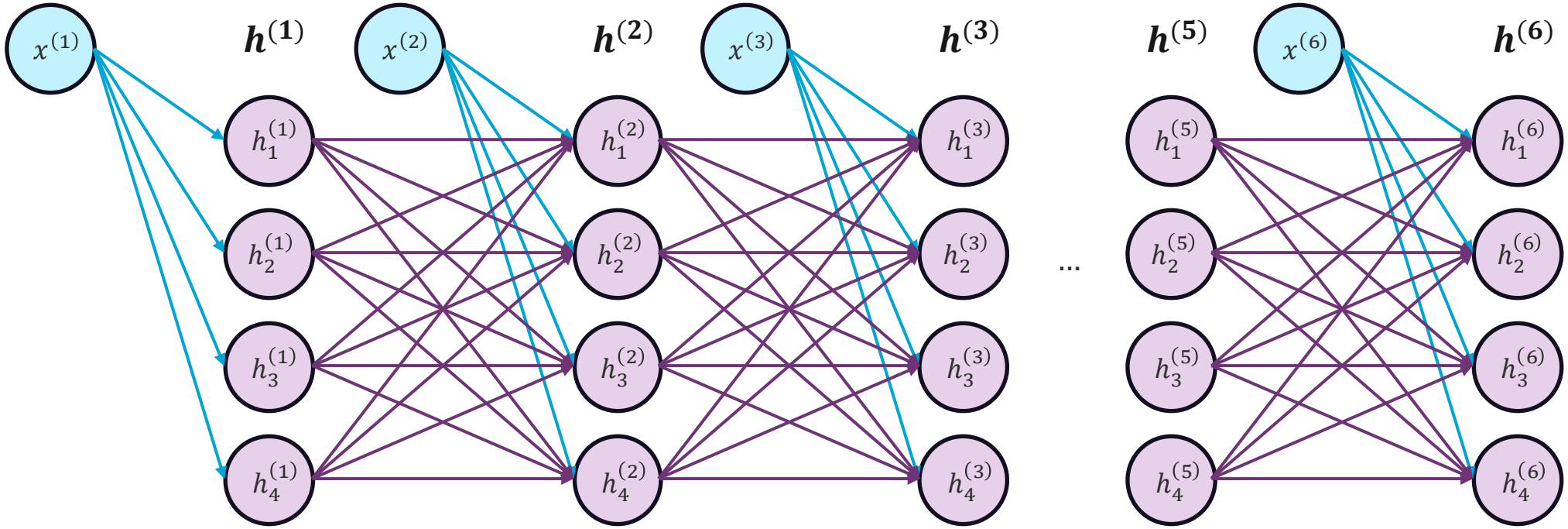

RNN Fundamentals I

Dense NN vs Simple RNN

Simple RNN $\boldsymbol{h}^{(t)} = g\left(\boldsymbol{W}\boldsymbol{h}^{(t-1)} + \boldsymbol{U}\boldsymbol{x}^{(t)} + \boldsymbol{b}\right)$

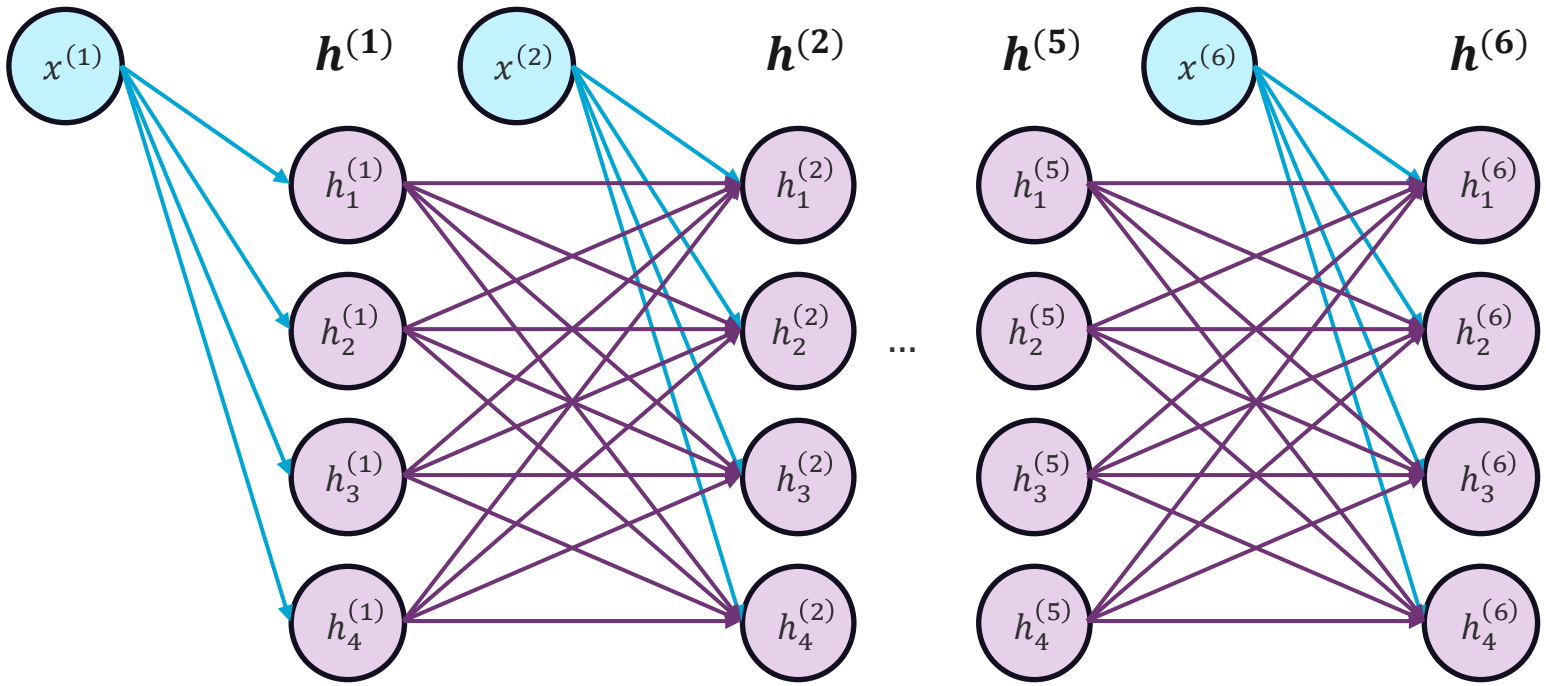

For a given simple RNN layer with **six input nodes** and **four hidden nodes** will have a corresponding **20 (plus 4) weight** parameters.

RNN Fundamentals I

Dense NN vs Simple RNN

Simple RNN $\boldsymbol{h}^{(t)} = g\left(\boldsymbol{W}\boldsymbol{h}^{(t-1)} + \boldsymbol{U}\boldsymbol{x}^{(t)} + \boldsymbol{b}\right)$

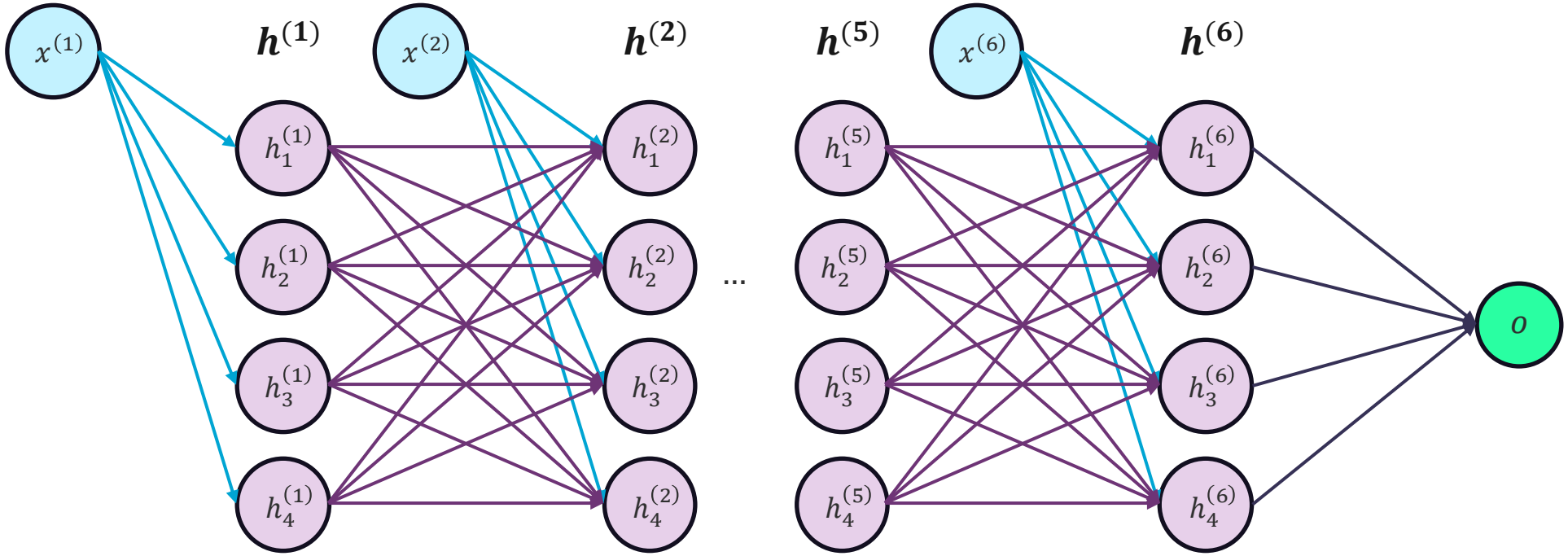

RNN Fundamentals I

Backpropagation Through Time

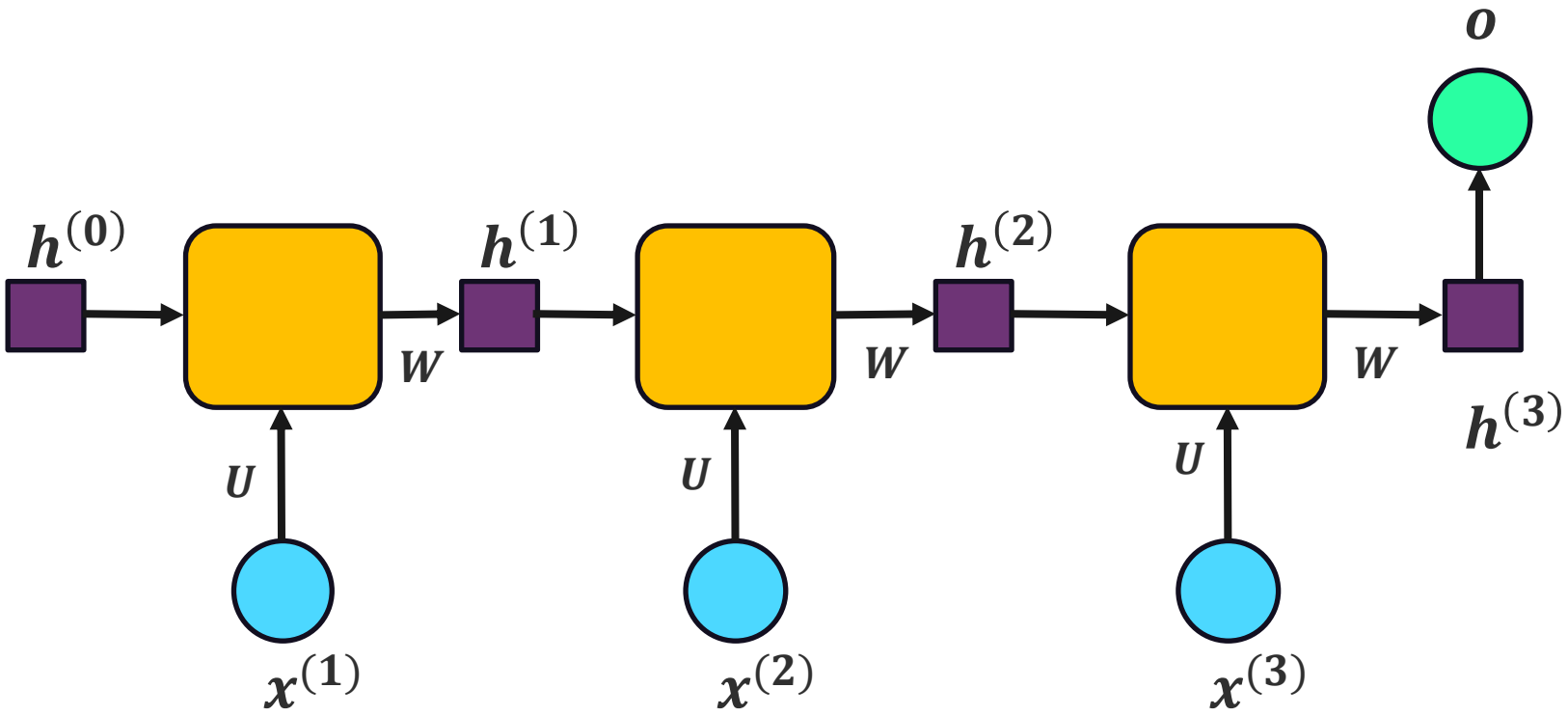

Forward Pass

$$o = f\left(Vh^{(3)} + v\right)$$

$$h^{(3)} = g\left(Wh^{(2)} + Ux^{(3)} + b\right)$$

$$h^{(2)} = g\left(Wh^{(1)} + Ux^{(2)} + b\right)$$

$$h^{(1)} = g\left(Wh^{(0)} + Ux^{(1)} + b\right)$$

Weight Change Rule

$$W^{t+1} = W^{t} - \alpha \frac{dL}{dW^{t}}$$

$$U^{t+1} = U^{t} - \alpha \frac{dL}{dU^{t}}$$

Backpropagation Through Time

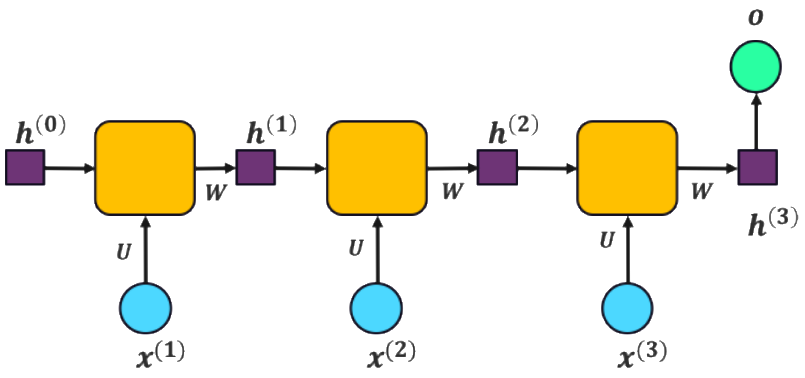

Forward Pass

$$\boldsymbol{o} = f\left(\boldsymbol{V}\boldsymbol{h}^{(3)} + \boldsymbol{v}\right)$$

$$\boldsymbol{h}^{(3)} = g\left(\boldsymbol{W}\boldsymbol{h}^{(2)} + \boldsymbol{U}\boldsymbol{x}^{(3)} + \boldsymbol{b}\right)$$

$$\boldsymbol{h}^{(2)} = g\left(\boldsymbol{W}\boldsymbol{h}^{(1)} + \boldsymbol{U}\boldsymbol{x}^{(2)} + \boldsymbol{b}\right)$$

$$\boldsymbol{h}^{(1)} = g\left(\boldsymbol{W}\boldsymbol{h}^{(0)} + \boldsymbol{U}\boldsymbol{x}^{(1)} + \boldsymbol{b}\right)$$

Weight Change Rule

$$\boldsymbol{W}^{t+1} = \boldsymbol{W}^{t} - \alpha \frac{dL}{d\boldsymbol{W}^{t}}$$

$$\boldsymbol{U}^{t+1} = \boldsymbol{U}^{t} - \alpha \frac{dL}{d\boldsymbol{U}^{t}}$$

Backpropagation Through Time

$$\frac{dL}{dW} = \frac{dL}{do} \cdot \frac{do}{dh^{(3)}} \cdot \frac{dh^{(3)}}{dW}$$

$$\frac{dh^{(3)}}{dW} = \frac{\partial h^{(3)}}{\partial W} + \frac{\partial h^{(3)}}{\partial h^{(2)}} \cdot \frac{dh^{(2)}}{dW}$$

$$\frac{dh^{(2)}}{dW} = \frac{\partial h^{(2)}}{\partial W} + \frac{\partial h^{(2)}}{\partial h^{(1)}} \cdot \frac{dh^{(1)}}{dW}$$

$$\frac{dh^{(1)}}{dW} = \frac{\partial h^{(1)}}{\partial W} + 0$$

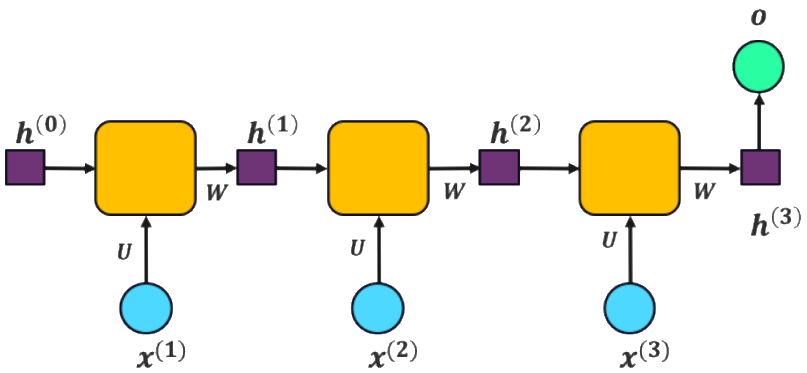

Forward Pass

$$o = f\left(Vh^{(3)} + v\right)$$

$$h^{(3)} = g\left(Wh^{(2)} + Ux^{(3)} + b\right)$$

$$h^{(2)} = g\left(Wh^{(1)} + Ux^{(2)} + b\right)$$

$$h^{(1)} = g\left(Wh^{(0)} + Ux^{(1)} + b\right)$$

Weight Change Rule

$$W^{t+1} = W^{t} - \alpha \frac{dL}{dW^{t}}$$

$$U^{t+1} = U^{t} - \alpha \frac{dL}{dU^{t}}$$

Backpropagation Through Time

$$\frac{dL}{dW} = \frac{dL}{do} \cdot \frac{do}{dh^{(3)}} \cdot \frac{dh^{(3)}}{dW}$$

$$\frac{dh^{(3)}}{dW} = \frac{\partial h^{(3)}}{\partial W} + \frac{\partial h^{(3)}}{\partial h^{(2)}} \cdot \frac{dh^{(2)}}{dW}$$

$$\frac{dh^{(2)}}{dW} = \frac{\partial h^{(2)}}{\partial W} + \frac{\partial h^{(2)}}{\partial h^{(1)}} \cdot \frac{dh^{(1)}}{dW}$$

$$\frac{dh^{(1)}}{dW} = \frac{\partial h^{(1)}}{\partial W} + 0$$

$$a_t = b_t + \sum_{i=1}^{t-1} b_i \left(\prod_{j=i+1}^{t} c_j \right)$$

BPTT

$$\frac{dh^{(t)}}{dW} = \frac{\partial h^{(t)}}{\partial W} + \sum_{i=1}^{t-1} \left(\frac{dh^{(i)}}{dW} \right) \cdot \left(\prod_{j=i+1}^{t} \frac{\partial h^{(j)}}{\partial h^{(j-1)}} \right)$$

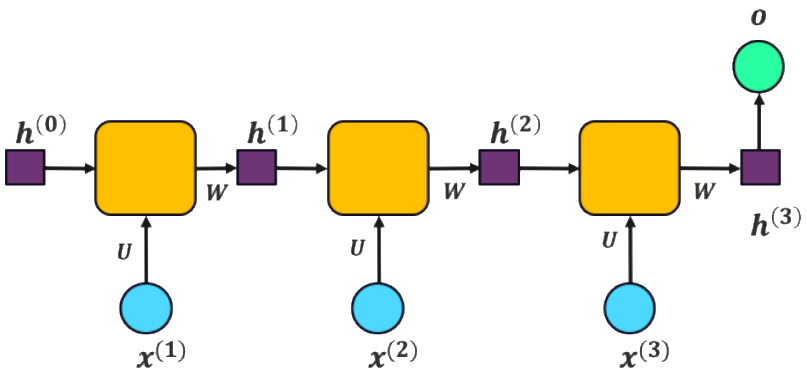

Forward Pass

$$o = f\left(Vh^{(3)} + v\right)$$

$$h^{(3)} = g\left(Wh^{(2)} + Ux^{(3)} + b\right)$$

$$h^{(2)} = g\left(Wh^{(1)} + Ux^{(2)} + b\right)$$

$$h^{(1)} = g\left(Wh^{(0)} + Ux^{(1)} + b\right)$$

Weight Change Rule

$$W^{t+1} = W^t - \alpha \frac{dL}{dW^t}$$

$$U^{t+1} = U^t - \alpha \frac{dL}{dU^t}$$

Backpropagation Through Time

In-Class Exercise 1

Show that BPTT for $\boldsymbol{U}$ yields

$$\frac{d\boldsymbol{h}^{(t)}}{d\boldsymbol{U}} = \frac{\partial \boldsymbol{h}^{(t)}}{\partial \boldsymbol{U}} + \sum_{i=1}^{t-1} \left(\frac{d\boldsymbol{h}^{(t-1)}}{d\boldsymbol{U}} \right) \cdot \left(\prod_{j=i+1}^{t} \frac{\partial \boldsymbol{h}^{(j)}}{\partial \boldsymbol{h}^{(j-1)}} \right)$$

1. $\frac{dL}{d\boldsymbol{U}} =$

2. $\frac{d\boldsymbol{h}^{(3)}}{d\boldsymbol{U}} =$

3. $\frac{d\boldsymbol{h}^{(2)}}{d\boldsymbol{U}} =$

4. $\frac{d\boldsymbol{h}^{(t)}}{d\boldsymbol{U}} =$

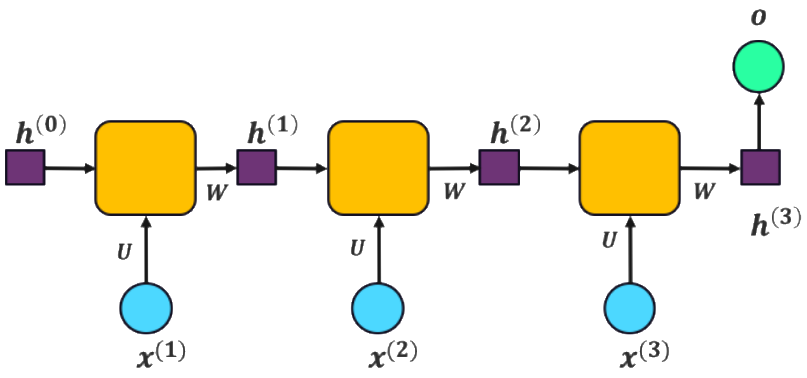

Forward Pass

$$\boldsymbol{o} = f\left(\boldsymbol{V}\boldsymbol{h}^{(3)} + \boldsymbol{v}\right)$$

$$\boldsymbol{h}^{(3)} = g\left(\boldsymbol{W}\boldsymbol{h}^{(2)} + \boldsymbol{U}\boldsymbol{x}^{(3)} + \boldsymbol{b}\right)$$

$$\boldsymbol{h}^{(2)} = g\left(\boldsymbol{W}\boldsymbol{h}^{(1)} + \boldsymbol{U}\boldsymbol{x}^{(2)} + \boldsymbol{b}\right)$$

$$\boldsymbol{h}^{(1)} = g\left(\boldsymbol{W}\boldsymbol{h}^{(0)} + \boldsymbol{U}\boldsymbol{x}^{(1)} + \boldsymbol{b}\right)$$

Weight Change Rule

$$\boldsymbol{W}^{t+1} = \boldsymbol{W}^{t} - \alpha \frac{dL}{d\boldsymbol{W}^{t}}$$

$$\boldsymbol{U}^{t+1} = \boldsymbol{U}^{t} - \alpha \frac{dL}{d\boldsymbol{U}^{t}}$$

RNN BPTT

Worked Example

Consider the problem of predicting the next bit in a binary sequence:

$$x = [1, 0, 1, 0, 1, \dots]$$

Construct an RNN that predicts the next value using the previous 2 values of the sequence with a learning rate of 0.2.

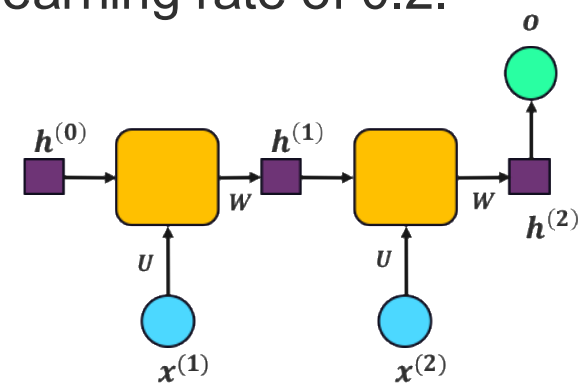

$$\boldsymbol{o} = \sigma\left(\boldsymbol{V}\boldsymbol{h}^{(2)}\right)$$

$$\boldsymbol{h}^{(t)} = \tanh\left(\boldsymbol{W}\boldsymbol{h}^{(t-1)} + \boldsymbol{U}\boldsymbol{x}^{(t)}\right)$$

$$\boldsymbol{W}^{(0)} = [\mathbf{1/2}]$$
$$\boldsymbol{U}^{(0)} = [\mathbf{1/2}]$$
$$\boldsymbol{V}^{(0)} = [\mathbf{1}]$$

BPTT Worked Example

$x = [1, 0]$, $y = [1]$

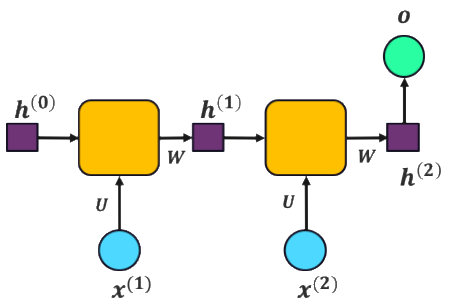

Forward Pass

$$\boldsymbol{o} = \sigma\left(\boldsymbol{V}\boldsymbol{h}^{(2)}\right)$$

$$\boldsymbol{h}^{(2)} = \tanh\left(\boldsymbol{W}\boldsymbol{h}^{(1)} + \boldsymbol{U}\boldsymbol{x}^{(2)}\right)$$

$$\boldsymbol{h}^{(1)} = \tanh\left(\boldsymbol{W}\boldsymbol{h}^{(0)} + \boldsymbol{U}\boldsymbol{x}^{(1)}\right)$$

$$\boldsymbol{W}^{(0)} = [\mathbf{1/2}]$$
$$\boldsymbol{U}^{(0)} = [\mathbf{1/2}]$$
$$\boldsymbol{V}^{(0)} = [\mathbf{1}]$$

BPTT Worked Example

$x = [1, 0],\ y = [1]$

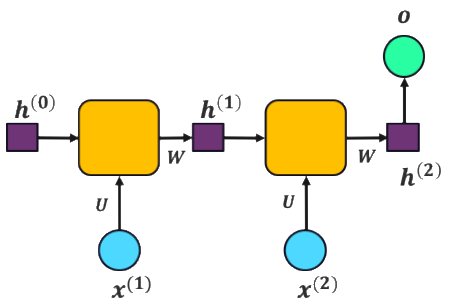

Forward Pass

$$\boldsymbol{h}^{(1)} = \tanh(1/2)$$

$$\boldsymbol{h}^{(2)} = \tanh\left(\frac{1}{2}\tanh\frac{1}{2}\right)$$

$$\boldsymbol{o} = \sigma\left(\tanh\left(\frac{1}{2}\tanh\frac{1}{2}\right)\right)$$

$$\boldsymbol{o} = \sigma\left(\boldsymbol{V}\boldsymbol{h}^{(2)}\right)$$

$$\boldsymbol{h}^{(2)} = \tanh\left(\boldsymbol{W}\boldsymbol{h}^{(1)} + \boldsymbol{U}\boldsymbol{x}^{(2)}\right)$$

$$\boldsymbol{h}^{(1)} = \tanh\left(\boldsymbol{W}\boldsymbol{h}^{(0)} + \boldsymbol{U}\boldsymbol{x}^{(1)}\right)$$

$$\boldsymbol{W}^{(0)} = [\mathbf{1/2}]$$
$$\boldsymbol{U}^{(0)} = [\mathbf{1/2}]$$
$$\boldsymbol{V}^{(0)} = [\mathbf{1}]$$

BPTT Worked Example

$x = [1, 0]$, $y = [1]$

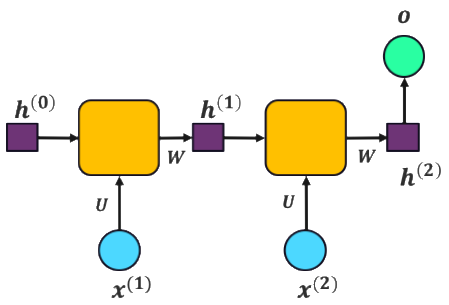

$$\boldsymbol{o} = \sigma\left(\boldsymbol{V}\boldsymbol{h}^{(2)}\right)$$

$$\boldsymbol{h}^{(2)} = \tanh\left(\boldsymbol{W}\boldsymbol{h}^{(1)} + \boldsymbol{U}\boldsymbol{x}^{(2)}\right)$$

$$\boldsymbol{h}^{(1)} = \tanh\left(\boldsymbol{W}\boldsymbol{h}^{(0)} + \boldsymbol{U}\boldsymbol{x}^{(1)}\right)$$

$$\boldsymbol{W}^{(0)} = [\mathbf{1/2}]$$
$$\boldsymbol{U}^{(0)} = [\mathbf{1/2}]$$
$$\boldsymbol{V}^{(0)} = [\mathbf{1}]$$

Forward Pass

$$\boldsymbol{h}^{(1)} = \tanh(1/2)$$

$$\boldsymbol{h}^{(2)} = \tanh\left(\frac{1}{2}\tanh\frac{1}{2}\right)$$

$$\boldsymbol{o} = \sigma\left(\tanh\left(\frac{1}{2}\tanh\frac{1}{2}\right)\right)$$

BPTT Worked Example

BPTT

$$L = \frac{1}{2}(y - o)^2$$

$$\frac{dL}{dV} = -(y - o) \cdot \sigma\left(Vh^{(2)}\right) \cdot \left(1 - \sigma\left(Vh^{(2)}\right)\right) \cdot h^{(2)}$$

$$\frac{dL}{dh^{(2)}} = -(y - o) \cdot \sigma\left(Vh^{(2)}\right) \cdot \left(1 - \sigma\left(Vh^{(2)}\right)\right) \cdot V$$

$$\frac{dL}{dU} = \frac{dL}{dh^{(2)}} \cdot \frac{dh^{(2)}}{dU}$$

$$\frac{dh^{(2)}}{dU} = \operatorname{sech}^2\left(Wh^{(1)} + Ux^{(2)}\right)\left[x^{(2)} + W \cdot \frac{dh^{(1)}}{dU}\right]$$

$$\frac{dh^{(1)}}{dU} = \operatorname{sech}^2\left(Wh^{(0)} + Ux^{(1)}\right) \cdot x^{(1)}$$

Sample

$x = [1, 0]$, $y = [1]$

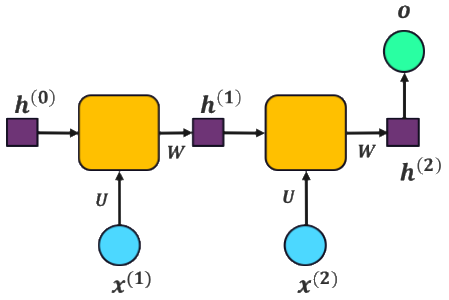

$$\boldsymbol{o} = \sigma\left(\boldsymbol{V}\boldsymbol{h}^{(2)}\right)$$

$$\boldsymbol{h}^{(2)} = \tanh\left(\boldsymbol{W}\boldsymbol{h}^{(1)} + \boldsymbol{U}\boldsymbol{x}^{(2)}\right)$$

$$\boldsymbol{h}^{(1)} = \tanh\left(\boldsymbol{W}\boldsymbol{h}^{(0)} + \boldsymbol{U}\boldsymbol{x}^{(1)}\right)$$

$$\boldsymbol{W}^{(0)} = [\mathbf{1/2}]$$
$$\boldsymbol{U}^{(0)} = [\mathbf{1/2}]$$
$$\boldsymbol{V}^{(0)} = [\mathbf{1}]$$

Forward Pass

$$\boldsymbol{h}^{(1)} = \tanh(1/2)$$

$$\boldsymbol{h}^{(2)} = \tanh\left(\frac{1}{2}\tanh\frac{1}{2}\right)$$

$$\boldsymbol{o} = \sigma\left(\tanh\left(\frac{1}{2}\tanh\frac{1}{2}\right)\right)$$

BPTT Worked Example

BPTT

$$L = \frac{1}{2}(y - o)^2$$

$$\frac{dL}{dV} = -(y - o) \cdot \sigma\left(Vh^{(2)}\right) \cdot \left(1 - \sigma\left(Vh^{(2)}\right)\right) \cdot h^{(2)}$$

$$\frac{dL}{dh^{(2)}} = -(y - o) \cdot \sigma\left(Vh^{(2)}\right) \cdot \left(1 - \sigma\left(Vh^{(2)}\right)\right) \cdot V$$

Sample

$x = [1, 0],\ y = [1]$

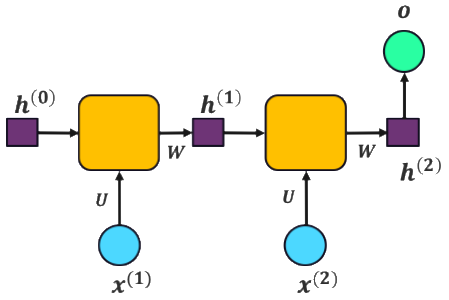

$$\boldsymbol{o} = \sigma\left(\boldsymbol{V}\boldsymbol{h}^{(2)}\right)$$

$$\boldsymbol{h}^{(2)} = \tanh\left(\boldsymbol{W}\boldsymbol{h}^{(1)} + \boldsymbol{U}\boldsymbol{x}^{(2)}\right)$$

$$\boldsymbol{h}^{(1)} = \tanh\left(\boldsymbol{W}\boldsymbol{h}^{(0)} + \boldsymbol{U}\boldsymbol{x}^{(1)}\right)$$

$$\boldsymbol{W}^{(0)} = [\mathbf{1/2}]$$
$$\boldsymbol{U}^{(0)} = [\mathbf{1/2}]$$
$$\boldsymbol{V}^{(0)} = [\mathbf{1}]$$

In-Class Exercise 2

$$\frac{dL}{dU} = \frac{dL}{dh^{(2)}} \cdot \frac{dh^{(2)}}{dU}$$

$$\frac{dh^{(2)}}{dU} = \operatorname{sech}^2\left(Wh^{(1)} + Ux^{(2)}\right)\left[x^{(2)} + W \cdot \frac{dh^{(1)}}{dU}\right]$$

$$\frac{dh^{(1)}}{dU} = \operatorname{sech}^2\left(Wh^{(0)} + Ux^{(1)}\right) \cdot x^{(1)}$$

$$\frac{dL}{dW} =$$

$$\frac{dh^{(2)}}{dW} =$$

$$\frac{dh^{(1)}}{dW} =$$

Forward Pass

$$\boldsymbol{h}^{(1)} = \tanh(1/2)$$

$$\boldsymbol{h}^{(2)} = \tanh\left(\frac{1}{2}\tanh\frac{1}{2}\right)$$

$$\boldsymbol{o} = \sigma\left(\tanh\left(\frac{1}{2}\tanh\frac{1}{2}\right)\right)$$

BPTT Worked Example

Weight Change Rule

$$V^{t+1} = V^t - \frac{1}{5} \cdot \frac{dL}{dV^t}$$

$$\frac{dL}{dV} = -(y - o) \cdot \sigma\left(Vh^{(2)}\right) \cdot \left(1 - \sigma\left(Vh^{(2)}\right)\right) \cdot h^{(2)}$$

Sample

$x = [1, 0]$, $y = [1]$

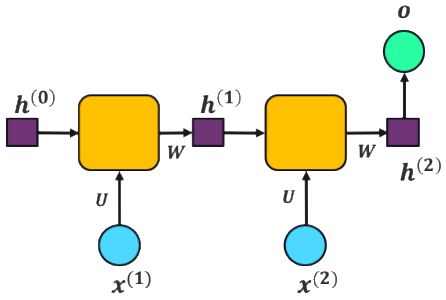

$$\boldsymbol{o} = \sigma\left(\boldsymbol{V}\boldsymbol{h}^{(2)}\right)$$

$$\boldsymbol{h}^{(2)} = \tanh\left(\boldsymbol{W}\boldsymbol{h}^{(1)} + \boldsymbol{U}\boldsymbol{x}^{(2)}\right)$$

$$\boldsymbol{h}^{(1)} = \tanh\left(\boldsymbol{W}\boldsymbol{h}^{(0)} + \boldsymbol{U}\boldsymbol{x}^{(1)}\right)$$

$$\boldsymbol{W}^{(0)} = [\mathbf{1/2}]$$
$$\boldsymbol{U}^{(0)} = [\mathbf{1/2}]$$
$$\boldsymbol{V}^{(0)} = [\mathbf{1}]$$

Forward Pass

$$\boldsymbol{h}^{(1)} = \tanh(1/2)$$

$$\boldsymbol{h}^{(2)} = \tanh\left(\frac{1}{2}\tanh\frac{1}{2}\right)$$

$$\boldsymbol{o} = \sigma\left(\tanh\left(\frac{1}{2}\tanh\frac{1}{2}\right)\right)$$

BPTT Worked Example

Weight Change Rule

$$V^{t+1} = V^t - \frac{1}{5} \cdot \frac{dL}{dV^t}$$

$$\frac{dL}{dV} = -(y - o) \cdot \sigma\left(Vh^{(2)}\right) \cdot \left(1 - \sigma\left(Vh^{(2)}\right)\right) \cdot h^{(2)}$$

$$\boxed{\frac{dL}{dV} = -\left(1 - \sigma\left(\tanh\left(\frac{1}{2}\tanh\frac{1}{2}\right)\right)\right)^2 \cdot \sigma\left(\tanh\left(\frac{1}{2}\tanh\frac{1}{2}\right)\right) \cdot \tanh\left(\frac{1}{2}\tanh\frac{1}{2}\right)}$$

Sample

$x = [1, 0]$, $y = [1]$

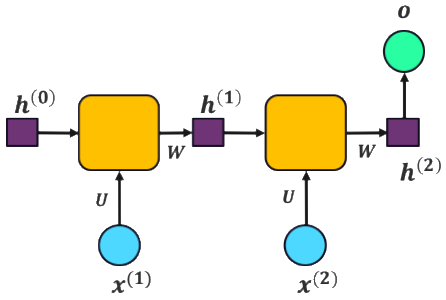

$$\boldsymbol{o} = \sigma\left(\boldsymbol{V}\boldsymbol{h}^{(2)}\right)$$

$$\boldsymbol{h}^{(2)} = \tanh\left(\boldsymbol{W}\boldsymbol{h}^{(1)} + \boldsymbol{U}\boldsymbol{x}^{(2)}\right)$$

$$\boldsymbol{h}^{(1)} = \tanh\left(\boldsymbol{W}\boldsymbol{h}^{(0)} + \boldsymbol{U}\boldsymbol{x}^{(1)}\right)$$

$$\boldsymbol{W}^{(0)} = [\mathbf{1/2}]$$
$$\boldsymbol{U}^{(0)} = [\mathbf{1/2}]$$
$$\boldsymbol{V}^{(0)} = [\mathbf{1}]$$

Forward Pass

$$\boldsymbol{h}^{(1)} = \tanh(1/2)$$

$$\boldsymbol{h}^{(2)} = \tanh\left(\frac{1}{2}\tanh\frac{1}{2}\right)$$

$$\boldsymbol{o} = \sigma\left(\tanh\left(\frac{1}{2}\tanh\frac{1}{2}\right)\right)$$

BPTT Worked Example

Weight Change Rule

$$U^{t+1} = U^t - \frac{1}{5} \cdot \frac{dL}{dU^t}$$

$$\frac{dL}{dh^{(2)}} = -(y - o) \cdot \sigma\left(Vh^{(2)}\right) \cdot \left(1 - \sigma\left(Vh^{(2)}\right)\right) \cdot V$$

$$\frac{dL}{dU} = \frac{dL}{dh^{(2)}} \cdot \frac{dh^{(2)}}{dU}$$

$$\frac{dh^{(2)}}{dU} = \operatorname{sech}^2\left(Wh^{(1)} + Ux^{(2)}\right)\left[x^{(2)} + W \cdot \frac{dh^{(1)}}{dU}\right]$$

$$\frac{dh^{(1)}}{dU} = \operatorname{sech}^2\left(Wh^{(0)} + Ux^{(1)}\right) \cdot x^{(1)}$$

Sample

$x = [1, 0]$, $y = [1]$

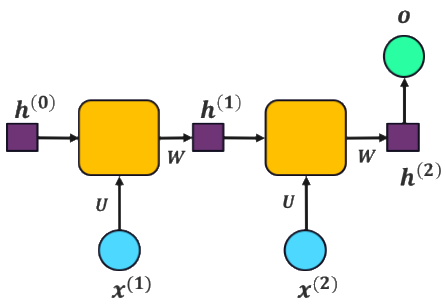

$$\boldsymbol{o} = \sigma\left(\boldsymbol{V}\boldsymbol{h}^{(2)}\right)$$

$$\boldsymbol{h}^{(2)} = \tanh\left(\boldsymbol{W}\boldsymbol{h}^{(1)} + \boldsymbol{U}\boldsymbol{x}^{(2)}\right)$$

$$\boldsymbol{h}^{(1)} = \tanh\left(\boldsymbol{W}\boldsymbol{h}^{(0)} + \boldsymbol{U}\boldsymbol{x}^{(1)}\right)$$

$$\boldsymbol{W}^{(0)} = [\mathbf{1/2}]$$
$$\boldsymbol{U}^{(0)} = [\mathbf{1/2}]$$
$$\boldsymbol{V}^{(0)} = [\mathbf{1}]$$

Forward Pass

$$\boldsymbol{h}^{(1)} = \tanh(1/2)$$

$$\boldsymbol{h}^{(2)} = \tanh\left(\frac{1}{2}\tanh\frac{1}{2}\right)$$

$$\boldsymbol{o} = \sigma\left(\tanh\left(\frac{1}{2}\tanh\frac{1}{2}\right)\right)$$

BPTT Worked Example

Weight Change Rule

Sample

$x = [1, 0],\ y = [1]$

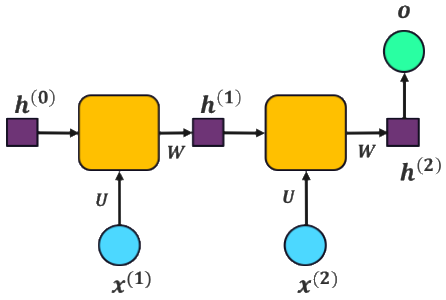

$$U^{t+1} = U^t - \frac{1}{5} \cdot \frac{dL}{dU^t}$$

$$\frac{dL}{dh^{(2)}} = -(y - o) \cdot \sigma\left(Vh^{(2)}\right) \cdot \left(1 - \sigma\left(Vh^{(2)}\right)\right) \cdot V$$

$$\frac{dL}{dU} = \frac{dL}{dh^{(2)}} \cdot \frac{dh^{(2)}}{dU}$$

$$\frac{dh^{(2)}}{dU} = \operatorname{sech}^2\left(Wh^{(1)} + Ux^{(2)}\right)\left[x^{(2)} + W \cdot \frac{dh^{(1)}}{dU}\right]$$

$$\frac{dh^{(1)}}{dU} = \operatorname{sech}^2\left(Wh^{(0)} + Ux^{(1)}\right) \cdot x^{(1)}$$

$$\boldsymbol{o} = \sigma\left(\boldsymbol{V}\boldsymbol{h}^{(2)}\right)$$

$$\boldsymbol{h}^{(2)} = \tanh\left(\boldsymbol{W}\boldsymbol{h}^{(1)} + \boldsymbol{U}\boldsymbol{x}^{(2)}\right)$$

$$\boldsymbol{h}^{(1)} = \tanh\left(\boldsymbol{W}\boldsymbol{h}^{(0)} + \boldsymbol{U}\boldsymbol{x}^{(1)}\right)$$

$$\boldsymbol{W}^{(0)} = [\mathbf{1/2}]$$
$$\boldsymbol{U}^{(0)} = [\mathbf{1/2}]$$
$$\boldsymbol{V}^{(0)} = [\mathbf{1}]$$

Forward Pass

$$\boldsymbol{h}^{(1)} = \tanh(1/2)$$

$$\boldsymbol{h}^{(2)} = \tanh\left(\frac{1}{2}\tanh\frac{1}{2}\right)$$

$$\boldsymbol{o} = \sigma\left(\tanh\left(\frac{1}{2}\tanh\frac{1}{2}\right)\right)$$

BPTT Worked Example

Weight Change Rule

$$U^{t+1} = U^t - \frac{1}{5} \cdot \frac{dL}{dU^t}$$

$$\boxed{\begin{aligned} \frac{dL}{dh^{(2)}} &= -\left(1 - \sigma\left(\tanh\left(\frac{1}{2}\tanh\frac{1}{2}\right)\right)\right)^2 \cdot \sigma\left(\tanh\left(\frac{1}{2}\tanh\frac{1}{2}\right)\right) \\ \frac{dL}{dU} &= \frac{dL}{dh^{(2)}} \cdot \operatorname{sech}^2\left(\frac{1}{2}\tanh\frac{1}{2}\right) \cdot \left[\frac{1}{2}\operatorname{sech}^2\left(\frac{1}{2}\right)\right] \end{aligned}}$$

Sample

$x = [1, 0]$, $y = [1]$

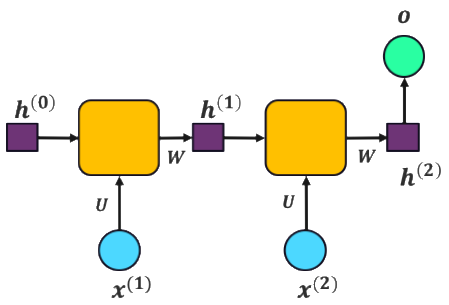

$$\boldsymbol{o} = \sigma\left(\boldsymbol{V}\boldsymbol{h}^{(2)}\right)$$

$$\boldsymbol{h}^{(2)} = \tanh\left(\boldsymbol{W}\boldsymbol{h}^{(1)} + \boldsymbol{U}\boldsymbol{x}^{(2)}\right)$$

$$\boldsymbol{h}^{(1)} = \tanh\left(\boldsymbol{W}\boldsymbol{h}^{(0)} + \boldsymbol{U}\boldsymbol{x}^{(1)}\right)$$

$$\boldsymbol{W}^{(0)} = [\mathbf{1/2}]$$
$$\boldsymbol{U}^{(0)} = [\mathbf{1/2}]$$
$$\boldsymbol{V}^{(0)} = [\mathbf{1}]$$

Forward Pass

$$\boldsymbol{h}^{(1)} = \tanh(1/2)$$

$$\boldsymbol{h}^{(2)} = \tanh\left(\frac{1}{2}\tanh\frac{1}{2}\right)$$

$$\boldsymbol{o} = \sigma\left(\tanh\left(\frac{1}{2}\tanh\frac{1}{2}\right)\right)$$

BPTT Worked Example

Weight Change Rule

$$W^{t+1} = W^t - \frac{1}{5} \cdot \frac{dL}{dW^t}$$

$$\frac{dL}{dh^{(2)}} = -\left(1 - \sigma\left(\tanh\left(\frac{1}{2}\tanh\frac{1}{2}\right)\right)\right)^2 \cdot \sigma\left(\tanh\left(\frac{1}{2}\tanh\frac{1}{2}\right)\right)$$

$$\frac{dL}{dW} = \frac{dL}{dh^{(2)}} \cdot \frac{dh^{(2)}}{dW}$$

$$\frac{dh^{(2)}}{dW} = \operatorname{sech}^2\left(Wh^{(1)} + Ux^{(2)}\right)\left[h^{(1)} + W \cdot \frac{dh^{(1)}}{dW}\right]$$

$$\frac{dh^{(1)}}{dW} = \operatorname{sech}^2\left(Wh^{(0)} + Ux^{(1)}\right) \cdot h^{(0)}$$

Sample

$x = [1, 0]$, $y = [1]$

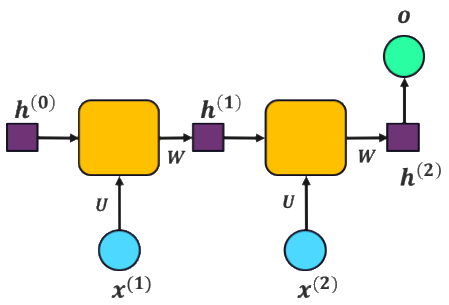

$$\boldsymbol{o} = \sigma\left(\boldsymbol{V}\boldsymbol{h}^{(2)}\right)$$

$$\boldsymbol{h}^{(2)} = \tanh\left(\boldsymbol{W}\boldsymbol{h}^{(1)} + \boldsymbol{U}\boldsymbol{x}^{(2)}\right)$$

$$\boldsymbol{h}^{(1)} = \tanh\left(\boldsymbol{W}\boldsymbol{h}^{(0)} + \boldsymbol{U}\boldsymbol{x}^{(1)}\right)$$

$$\boldsymbol{W}^{(0)} = [\mathbf{1/2}]$$
$$\boldsymbol{U}^{(0)} = [\mathbf{1/2}]$$
$$\boldsymbol{V}^{(0)} = [\mathbf{1}]$$

Forward Pass

$$\boldsymbol{h}^{(1)} = \tanh(1/2)$$

$$\boldsymbol{h}^{(2)} = \tanh\left(\frac{1}{2}\tanh\frac{1}{2}\right)$$

$$\boldsymbol{o} = \sigma\left(\tanh\left(\frac{1}{2}\tanh\frac{1}{2}\right)\right)$$

BPTT Worked Example

Weight Change Rule

$$W^{t+1} = W^t - \frac{1}{5} \cdot \frac{dL}{dW^t}$$

$$\frac{dL}{dh^{(2)}} = -\left(1 - \sigma\left(\tanh\left(\frac{1}{2}\tanh\frac{1}{2}\right)\right)\right)^2 \cdot \sigma\left(\tanh\left(\frac{1}{2}\tanh\frac{1}{2}\right)\right)$$

$$\frac{dL}{dW} = \frac{dL}{dh^{(2)}} \cdot \frac{dh^{(2)}}{dW}$$

$$\frac{dh^{(2)}}{dW} = \operatorname{sech}^2\left(Wh^{(1)} + Ux^{(2)}\right)\left[h^{(1)} + W \cdot \frac{dh^{(1)}}{dW}\right]$$

$$\frac{dh^{(1)}}{dW} = \operatorname{sech}^2\left(Wh^{(0)} + Ux^{(1)}\right) \cdot h^{(0)}$$

Sample

$$x = [1, 0],\ y = [1]$$

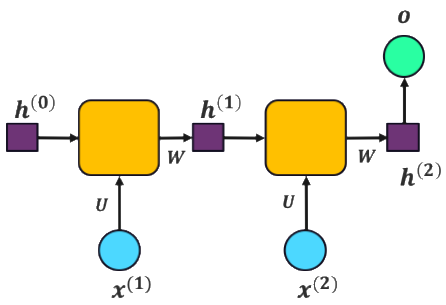

$$\boldsymbol{o} = \sigma\left(\boldsymbol{V}\boldsymbol{h}^{(2)}\right)$$

$$\boldsymbol{h}^{(2)} = \tanh\left(\boldsymbol{W}\boldsymbol{h}^{(1)} + \boldsymbol{U}\boldsymbol{x}^{(2)}\right)$$

$$\boldsymbol{h}^{(1)} = \tanh\left(\boldsymbol{W}\boldsymbol{h}^{(0)} + \boldsymbol{U}\boldsymbol{x}^{(1)}\right)$$

$$\boldsymbol{W}^{(0)} = [1/2]$$
$$\boldsymbol{U}^{(0)} = [1/2]$$
$$\boldsymbol{V}^{(0)} = [1]$$

Forward Pass

$$\boldsymbol{h}^{(1)} = \tanh(1/2)$$

$$\boldsymbol{h}^{(2)} = \tanh\left(\frac{1}{2}\tanh\frac{1}{2}\right)$$

$$\boldsymbol{o} = \sigma\left(\tanh\left(\frac{1}{2}\tanh\frac{1}{2}\right)\right)$$

BPTT Worked Example

Weight Change Rule

$$W^{t+1} = W^t - \frac{1}{5} \cdot \frac{dL}{dW^t}$$

$$\boxed{\begin{aligned} \frac{dL}{dh^{(2)}} &= -\left(1 - \sigma\left(\tanh\left(\frac{1}{2}\tanh\frac{1}{2}\right)\right)\right)^2 \cdot \sigma\left(\tanh\left(\frac{1}{2}\tanh\frac{1}{2}\right)\right) \\ \frac{dL}{dW} &= \frac{dL}{dh^{(2)}} \cdot \operatorname{sech}^2\left(\frac{1}{2}\tanh\frac{1}{2}\right) \cdot \left[\tanh\frac{1}{2}\right] \end{aligned}}$$

Sample

$x = [1, 0]$, $y = [1]$

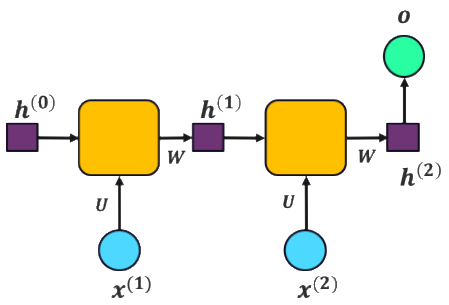

$$\boldsymbol{o} = \sigma\left(\boldsymbol{V}\boldsymbol{h}^{(2)}\right)$$

$$\boldsymbol{h}^{(2)} = \tanh\left(\boldsymbol{W}\boldsymbol{h}^{(1)} + \boldsymbol{U}\boldsymbol{x}^{(2)}\right)$$

$$\boldsymbol{h}^{(1)} = \tanh\left(\boldsymbol{W}\boldsymbol{h}^{(0)} + \boldsymbol{U}\boldsymbol{x}^{(1)}\right)$$

$$\boldsymbol{W}^{(0)} = [\mathbf{1/2}]$$
$$\boldsymbol{U}^{(0)} = [\mathbf{1/2}]$$
$$\boldsymbol{V}^{(0)} = [\mathbf{1}]$$

Forward Pass

$$\boldsymbol{h}^{(1)} = \tanh(1/2)$$

$$\boldsymbol{h}^{(2)} = \tanh\left(\frac{1}{2}\tanh\frac{1}{2}\right)$$

$$\boldsymbol{o} = \sigma\left(\tanh\left(\frac{1}{2}\tanh\frac{1}{2}\right)\right)$$

BPTT Worked Example

For $\boldsymbol{V}$

$$V^{t+1} = V^t - \frac{1}{5} \cdot \frac{dL}{dV^t}$$

$$\frac{dL}{dV} = -\left(1 - \sigma\left(\tanh\left(\frac{1}{2}\tanh\frac{1}{2}\right)\right)\right)^2 \cdot \sigma\left(\tanh\left(\frac{1}{2}\tanh\frac{1}{2}\right)\right) \cdot \tanh\left(\frac{1}{2}\tanh\frac{1}{2}\right)$$

For $\boldsymbol{U}$

$$U^{t+1} = U^t - \frac{1}{5} \cdot \frac{dL}{dU^t}$$

$$\frac{dL}{dU} = \frac{dL}{dh^{(2)}} \cdot \operatorname{sech}^2\left(\frac{1}{2}\tanh\frac{1}{2}\right) \cdot \left[\frac{1}{2}\operatorname{sech}^2\left(\frac{1}{2}\right)\right]$$

For $\boldsymbol{W}$

$$W^{t+1} = W^t - \frac{1}{5} \cdot \frac{dL}{dW^t}$$

$$\frac{dL}{dW} = \frac{dL}{dh^{(2)}} \cdot \operatorname{sech}^2\left(\frac{1}{2}\tanh\frac{1}{2}\right) \cdot \left[\tanh\frac{1}{2}\right]$$

where,

$$\frac{dL}{dh^{(2)}} = -\left(1 - \sigma\left(\tanh\left(\frac{1}{2}\tanh\frac{1}{2}\right)\right)\right)^2 \cdot \sigma\left(\tanh\left(\frac{1}{2}\tanh\frac{1}{2}\right)\right)$$

Sample

$x = [1, 0]$, $y = [1]$

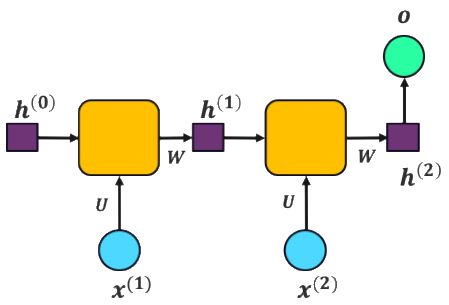

$$\boldsymbol{o} = \sigma(\boldsymbol{V}\boldsymbol{h}^{(2)})$$

$$\boldsymbol{h}^{(2)} = \tanh(\boldsymbol{W}\boldsymbol{h}^{(1)} + \boldsymbol{U}\boldsymbol{x}^{(2)})$$

$$\boldsymbol{h}^{(1)} = \tanh(\boldsymbol{W}\boldsymbol{h}^{(0)} + \boldsymbol{U}\boldsymbol{x}^{(1)})$$

$$\boldsymbol{W}^{(0)} = [\mathbf{1/2}]$$
$$\boldsymbol{U}^{(0)} = [\mathbf{1/2}]$$
$$\boldsymbol{V}^{(0)} = [\mathbf{1}]$$

Forward Pass

$$\boldsymbol{h}^{(1)} = \tanh(1/2)$$

$$\boldsymbol{h}^{(2)} = \tanh\left(\frac{1}{2}\tanh\frac{1}{2}\right)$$

$$\boldsymbol{o} = \sigma\left(\tanh\left(\frac{1}{2}\tanh\frac{1}{2}\right)\right)$$