ASIAN INSTITUTE OF MANAGEMENT

Machine Learning 3

CNN Fundamentals

Session 5

MSDS 2026

24 April 2026

ASIAN INSTITUTE OF MANAGEMENT

Class Administrative Matters

Course Deliverables

Assessed – R1, R2, E1 – Course Introduction

Upcoming – R3 (Friday, April 24), E4 (Monday, May 4)

Course Schedule

Additional sessions for CNN (and possibly RNN)

Other

GPU access in jojie

Session 5 and 6 – CNN Fundmentals II

Gameplan

Session 5

Backpropagation in CNNs

Simple CNN

Session 6

Regularization in CNNs

Pretrained CNN Models

Backpropagation in CNNs

Backpropagation in CNNs

Fully Connected vs. Convolutional Layer

Fully Connected Layer

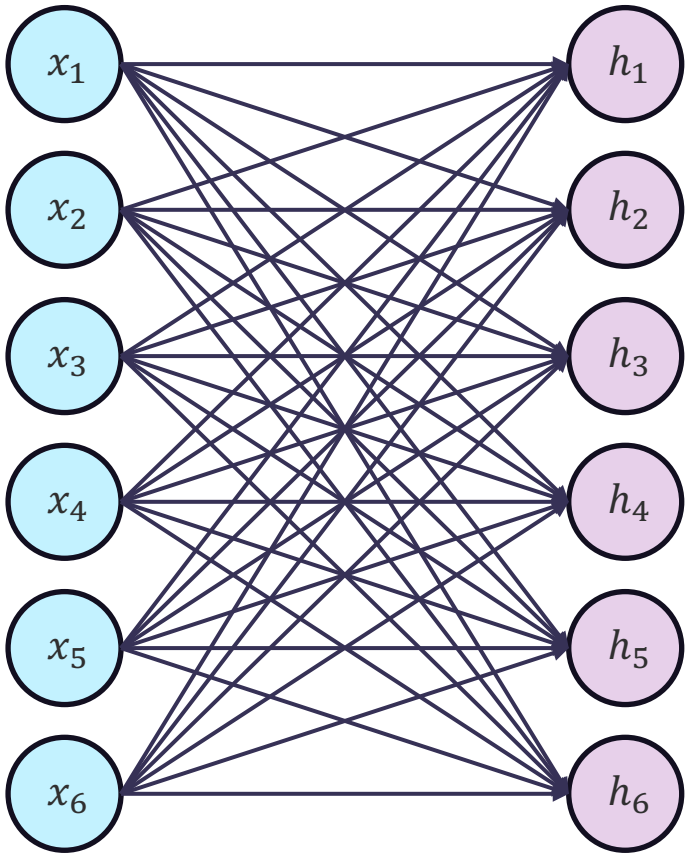

For a given fully connected layer with **six input nodes** and **six hidden nodes** will have a corresponding **36 weight** parameters.

Backpropagation in CNNs

Fully Connected vs. Convolutional Layer

Convolutional Layer

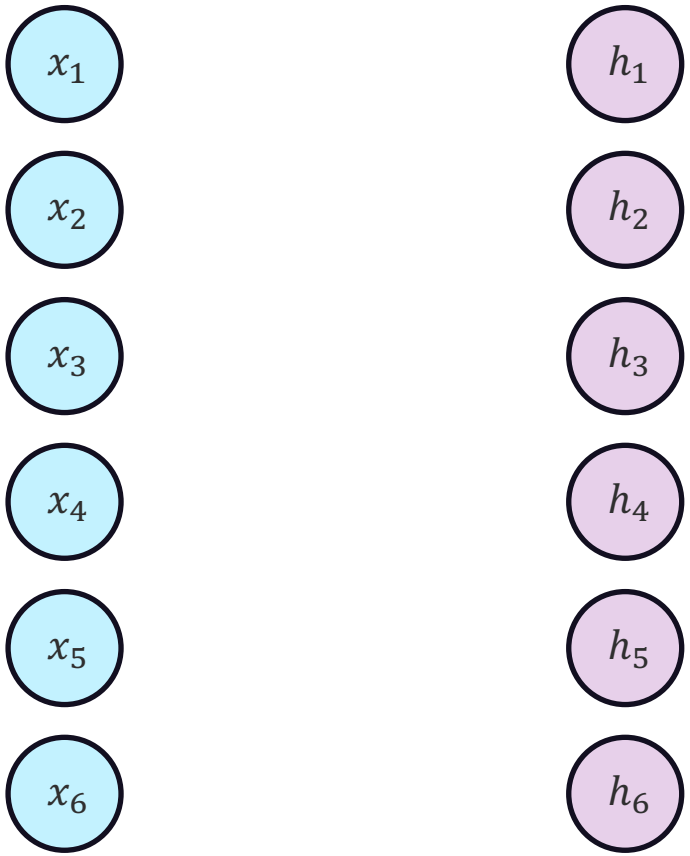

Backpropagation in CNNs

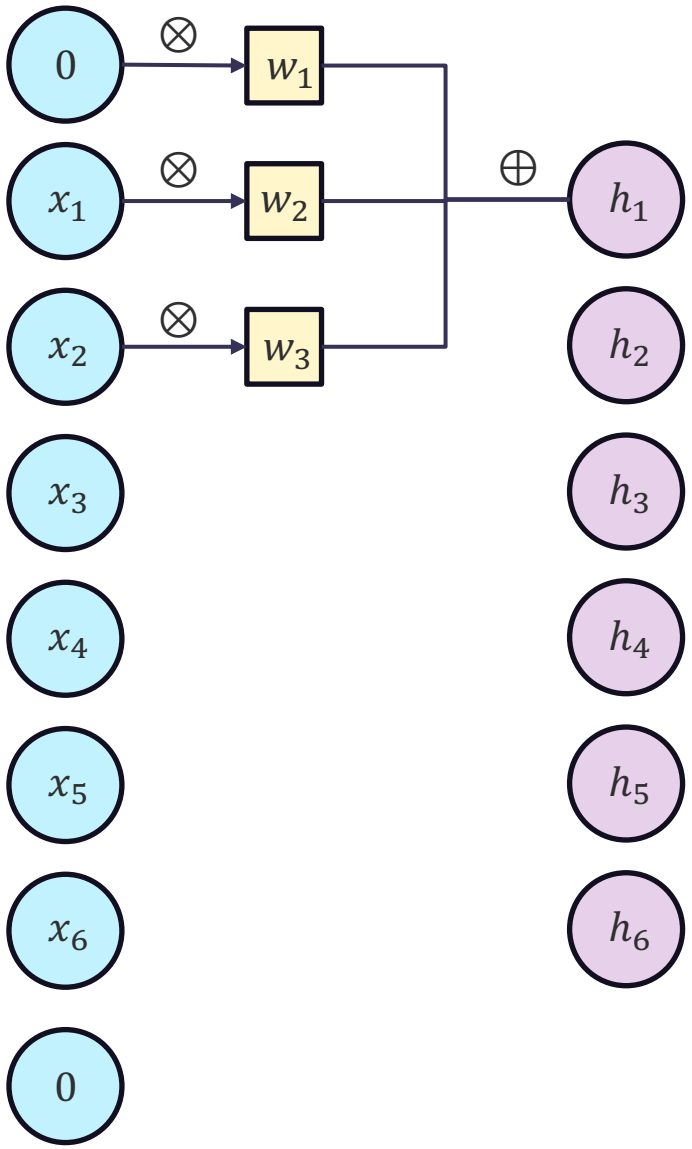

Backpropagation in CNNs

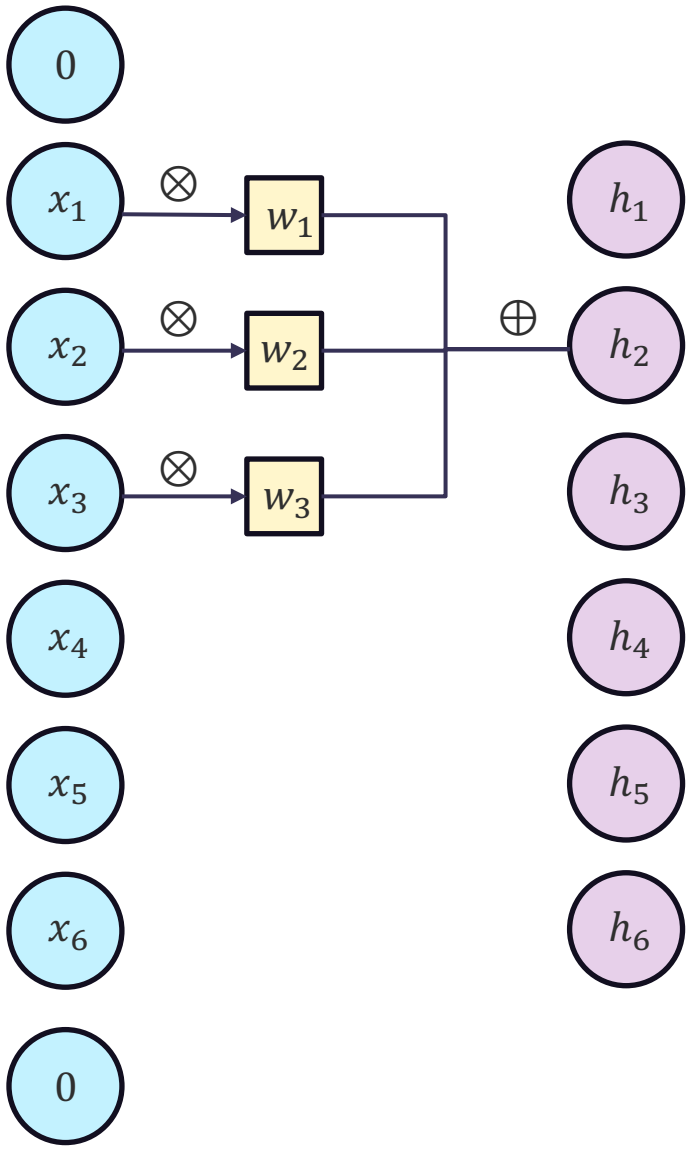

Backpropagation in CNNs

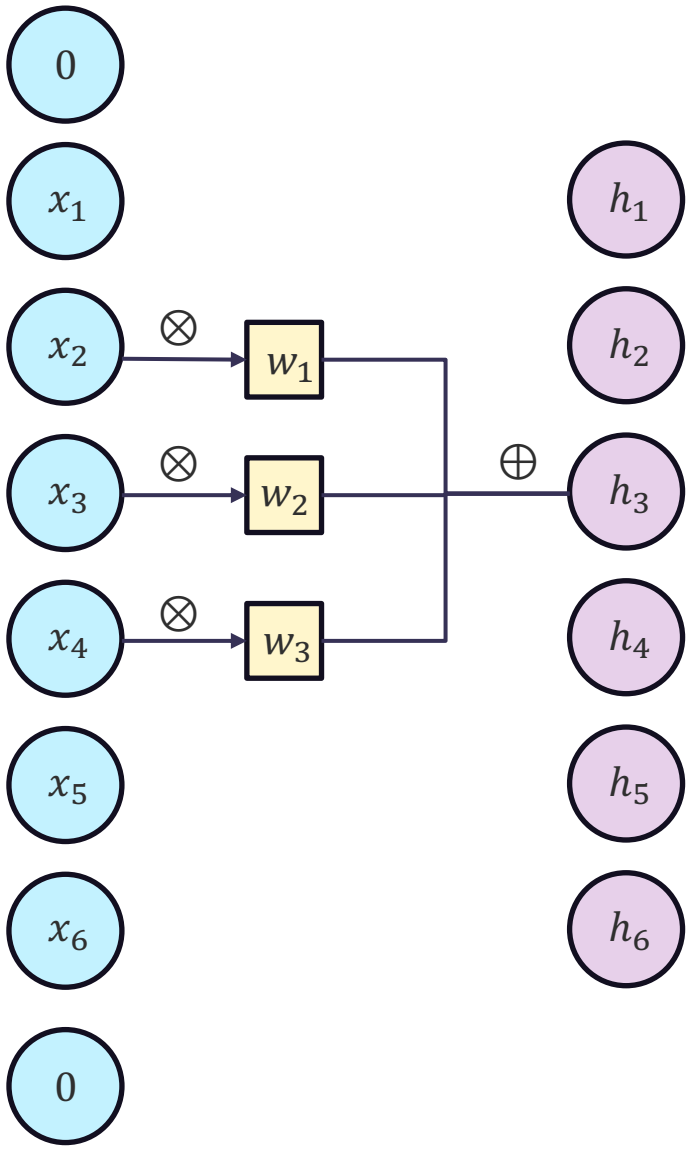

Backpropagation in CNNs

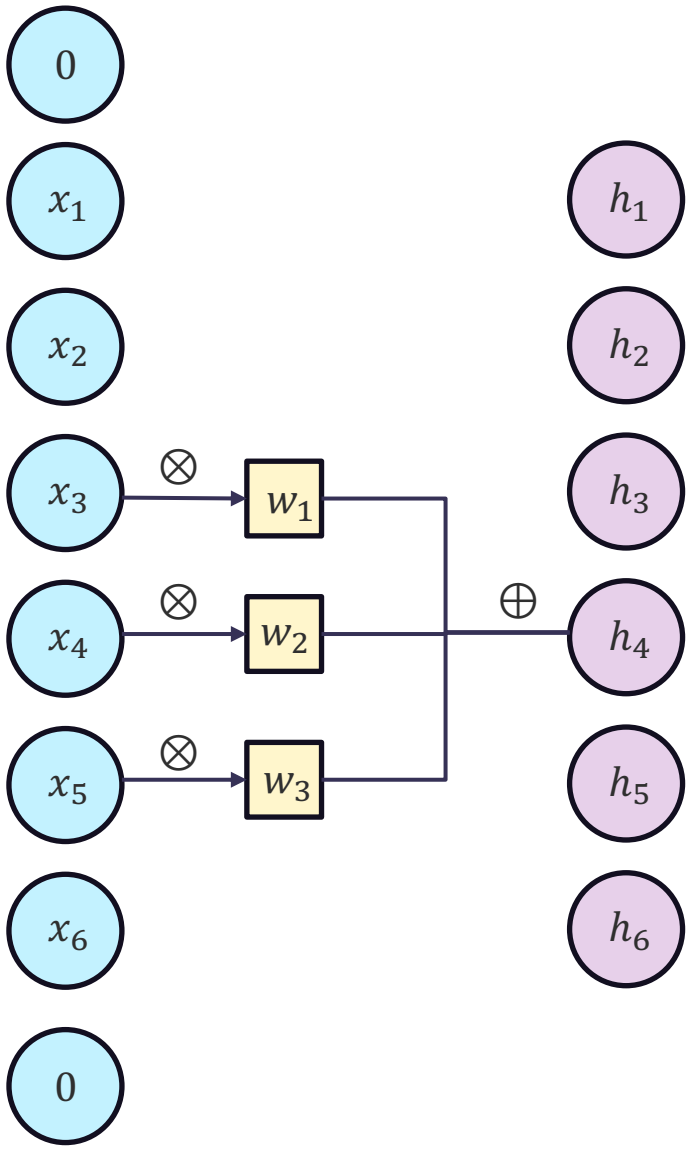

Backpropagation in CNNs

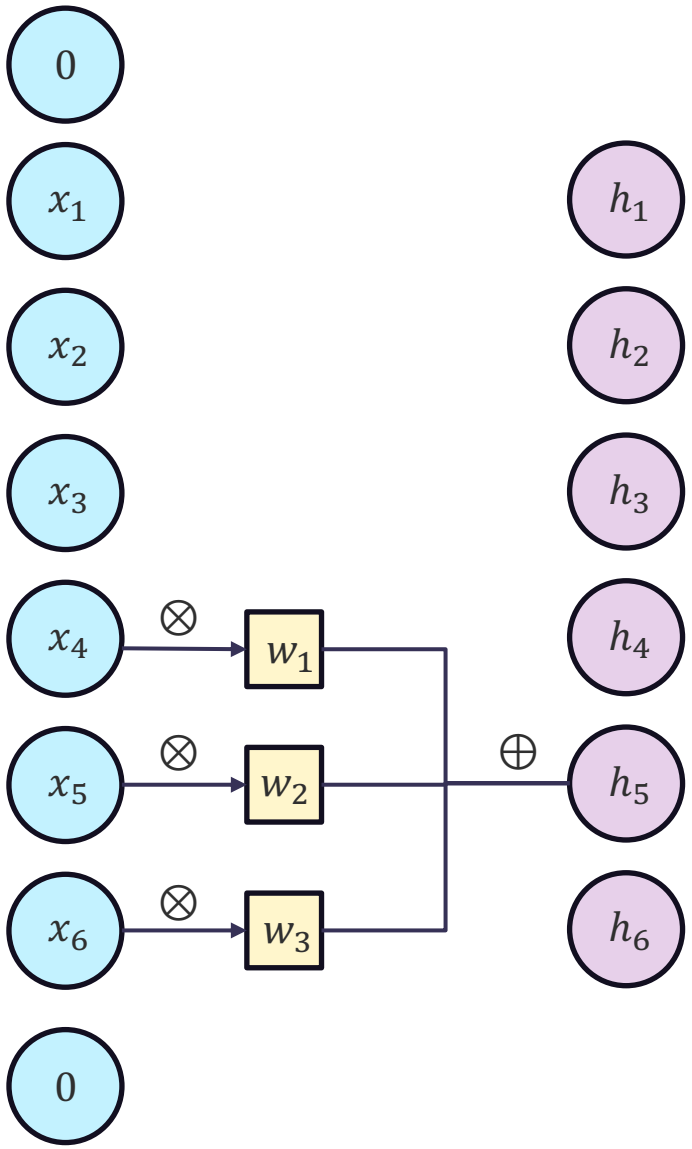

Backpropagation in CNNs

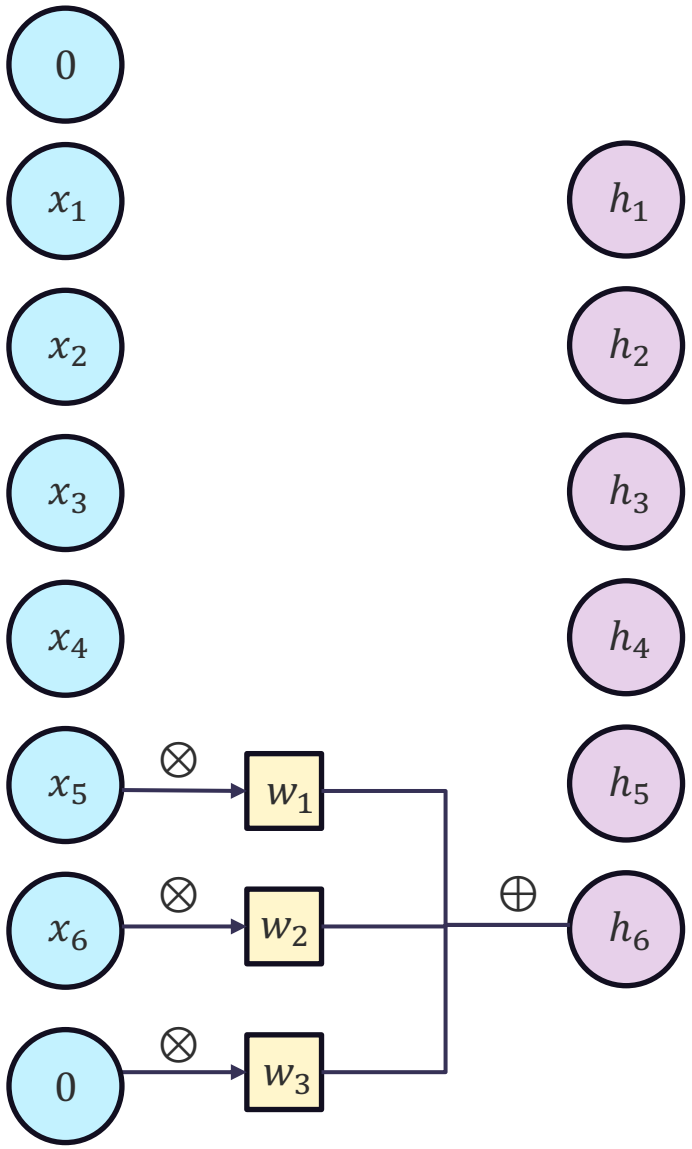

Backpropagation in CNNs

Fully Connected vs. Convolutional Layer

Convolutional Layer

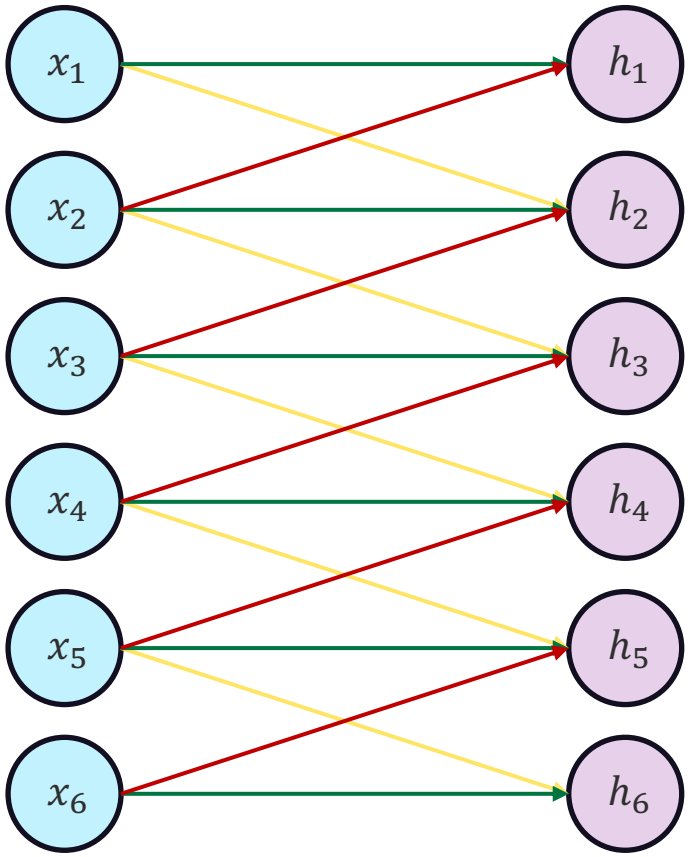

For a convolutional layer with **six input nodes**, **one padding**, and **three kernel size**, we will have **six hidden nodes** and a corresponding **three weight** parameters.

Backpropagation in CNNs

Convolution Forward Pass

For an input **3 x 3 image** and convolutional layer with **2 x 2 kernel size** with **no padding** and **stride 1**, we will have **four output nodes** and a **four weight parameters**.

Convolution

$$\left(\begin{bmatrix} x_{11} & x_{12} & x_{13} \\ x_{21} & x_{22} & x_{23} \\ x_{31} & x_{32} & x_{33} \end{bmatrix}, \begin{bmatrix} w_{11} & w_{12} \\ w_{21} & w_{22} \end{bmatrix} \right) = \begin{bmatrix} o_{11} & o_{12} \\ o_{21} & o_{22} \end{bmatrix}$$

Backpropagation in CNNs

Convolution Forward Pass

x_{11}	x_{12}	x_{13}
x_{21}	x_{22}	x_{23}
x_{31}	x_{32}	x_{33}

w_{11}	w_{12}
w_{21}	w_{22}

o_{11}	o_{12}
o_{21}	o_{22}

$$o_{11} = w_{11}x_{11} + w_{12}x_{12} + w_{21}x_{21} + w_{22}x_{22}$$

$$o_{12} = w_{11}x_{12} + w_{12}x_{13} + w_{21}x_{22} + w_{22}x_{23}$$

$$o_{21} = w_{11}x_{21} + w_{12}x_{22} + w_{21}x_{31} + w_{22}x_{32}$$

$$o_{22} = w_{11}x_{22} + w_{12}x_{23} + w_{21}x_{32} + w_{22}x_{33}$$

Backpropagation in CNNs

x_{11}	x_{12}	x_{13}
x_{21}	x_{22}	x_{23}
x_{31}	x_{32}	x_{33}

w_{11}	w_{12}
w_{21}	w_{22}

o_{11}	o_{12}
o_{21}	o_{22}

Convolution Forward Pass

$$o_{11} = w_{11}x_{11} + w_{12}x_{12} + w_{21}x_{21} + w_{22}x_{22}$$

$$o_{12} = w_{11}x_{12} + w_{12}x_{13} + w_{21}x_{22} + w_{22}x_{23}$$

$$o_{21} = w_{11}x_{21} + w_{12}x_{22} + w_{21}x_{31} + w_{22}x_{32}$$

$$o_{22} = w_{11}x_{22} + w_{12}x_{23} + w_{21}x_{32} + w_{22}x_{33}$$

Weight-Change Rule

$$w_{11}^{t+1} = w_{11}^{t} - \alpha \frac{dL}{dw_{11}} \qquad w_{12}^{t+1} = w_{12}^{t} - \alpha \frac{dL}{dw_{12}}$$

$$w_{21}^{t+1} = w_{21}^{t} - \alpha \frac{dL}{dw_{21}} \qquad w_{22}^{t+1} = w_{22}^{t} - \alpha \frac{dL}{dw_{22}}$$

Backpropagation in CNNs

x_{11}	x_{12}	x_{13}
x_{21}	x_{22}	x_{23}
x_{31}	x_{32}	x_{33}

w_{11}	w_{12}
w_{21}	w_{22}

o_{11}	o_{12}
o_{21}	o_{22}

Backpropagation

$$\frac{dL}{dw_{11}} = \frac{\partial L}{\partial o_{11}} \cdot \frac{do_{11}}{dw_{11}} + \frac{\partial L}{\partial o_{12}} \cdot \frac{do_{12}}{dw_{11}} + \frac{\partial L}{\partial o_{21}} \cdot \frac{do_{21}}{dw_{11}} + \frac{\partial L}{\partial o_{22}} \cdot \frac{do_{22}}{dw_{11}}$$

$$\frac{dL}{dw_{12}} = \frac{\partial L}{\partial o_{11}} \cdot \frac{do_{11}}{dw_{12}} + \frac{\partial L}{\partial o_{12}} \cdot \frac{do_{12}}{dw_{12}} + \frac{\partial L}{\partial o_{21}} \cdot \frac{do_{21}}{dw_{12}} + \frac{\partial L}{\partial o_{22}} \cdot \frac{do_{22}}{dw_{12}}$$

$$\frac{dL}{dw_{21}} = \frac{\partial L}{\partial o_{11}} \cdot \frac{do_{11}}{dw_{21}} + \frac{\partial L}{\partial o_{12}} \cdot \frac{do_{12}}{dw_{21}} + \frac{\partial L}{\partial o_{21}} \cdot \frac{do_{21}}{dw_{21}} + \frac{\partial L}{\partial o_{22}} \cdot \frac{do_{22}}{dw_{21}}$$

$$\frac{dL}{dw_{22}} = \frac{\partial L}{\partial o_{11}} \cdot \frac{do_{11}}{dw_{22}} + \frac{\partial L}{\partial o_{12}} \cdot \frac{do_{12}}{dw_{22}} + \frac{\partial L}{\partial o_{21}} \cdot \frac{do_{21}}{dw_{22}} + \frac{\partial L}{\partial o_{22}} \cdot \frac{do_{22}}{dw_{22}}$$

Convolution Forward Pass

$$o_{11} = w_{11}x_{11} + w_{12}x_{12} + w_{21}x_{21} + w_{22}x_{22}$$

$$o_{12} = w_{11}x_{12} + w_{12}x_{13} + w_{21}x_{22} + w_{22}x_{23}$$

$$o_{21} = w_{11}x_{21} + w_{12}x_{22} + w_{21}x_{31} + w_{22}x_{32}$$

$$o_{22} = w_{11}x_{22} + w_{12}x_{23} + w_{21}x_{32} + w_{22}x_{33}$$

Weight-Change Rule

$$w_{11}^{t+1} = w_{11}^{t} - \alpha \frac{dL}{dw_{11}}$$

$$w_{21}^{t+1} = w_{21}^{t} - \alpha \frac{dL}{dw_{21}}$$

$$w_{12}^{t+1} = w_{12}^{t} - \alpha \frac{dL}{dw_{12}}$$

$$w_{22}^{t+1} = w_{22}^{t} - \alpha \frac{dL}{dw_{22}}$$

Backpropagation in CNNs

x_{11}	x_{12}	x_{13}
x_{21}	x_{22}	x_{23}
x_{31}	x_{32}	x_{33}

w_{11}	w_{12}
w_{21}	w_{22}

o_{11}	o_{12}
o_{21}	o_{22}

Backpropagation

$$\frac{dL}{dw_{11}} = \frac{\partial L}{\partial o_{11}} \cdot x_{11} + \frac{\partial L}{\partial o_{12}} \cdot x_{12} + \frac{\partial L}{\partial o_{21}} \cdot x_{21} + \frac{\partial L}{\partial o_{22}} \cdot x_{22}$$

$$\frac{dL}{dw_{12}} = \frac{\partial L}{\partial o_{11}} \cdot x_{12} + \frac{\partial L}{\partial o_{12}} \cdot x_{13} + \frac{\partial L}{\partial o_{21}} \cdot x_{22} + \frac{\partial L}{\partial o_{22}} \cdot x_{23}$$

$$\frac{dL}{dw_{21}} = \frac{\partial L}{\partial o_{11}} \cdot x_{21} + \frac{\partial L}{\partial o_{12}} \cdot x_{22} + \frac{\partial L}{\partial o_{21}} \cdot x_{31} + \frac{\partial L}{\partial o_{22}} \cdot x_{32}$$

$$\frac{dL}{dw_{22}} = \frac{\partial L}{\partial o_{11}} \cdot x_{22} + \frac{\partial L}{\partial o_{12}} \cdot x_{23} + \frac{\partial L}{\partial o_{21}} \cdot x_{32} + \frac{\partial L}{\partial o_{22}} \cdot x_{33}$$

Convolution Forward Pass

$$o_{11} = w_{11}x_{11} + w_{12}x_{12} + w_{21}x_{21} + w_{22}x_{22}$$

$$o_{12} = w_{11}x_{12} + w_{12}x_{13} + w_{21}x_{22} + w_{22}x_{23}$$

$$o_{21} = w_{11}x_{21} + w_{12}x_{22} + w_{21}x_{31} + w_{22}x_{32}$$

$$o_{22} = w_{11}x_{22} + w_{12}x_{23} + w_{21}x_{32} + w_{22}x_{33}$$

Weight-Change Rule

$$w_{11}^{t+1} = w_{11}^{t} - \alpha \frac{dL}{dw_{11}}$$

$$w_{21}^{t+1} = w_{21}^{t} - \alpha \frac{dL}{dw_{21}}$$

$$w_{12}^{t+1} = w_{12}^{t} - \alpha \frac{dL}{dw_{12}}$$

$$w_{22}^{t+1} = w_{22}^{t} - \alpha \frac{dL}{dw_{22}}$$

Backpropagation in CNNs

$$\begin{bmatrix} x_{11} & x_{12} & x_{13} \\ x_{21} & x_{22} & x_{23} \\ x_{31} & x_{32} & x_{33} \end{bmatrix} \quad \begin{bmatrix} w_{11} & w_{12} \\ w_{21} & w_{22} \end{bmatrix} \quad \begin{bmatrix} o_{11} & o_{12} \\ o_{21} & o_{22} \end{bmatrix}$$

Backpropagation

$$\begin{bmatrix} \frac{dL}{dw_{11}} & \frac{dL}{dw_{12}} \\ \frac{dL}{dw_{21}} & \frac{dL}{dw_{22}} \end{bmatrix} = \text{Convolution} \left(\begin{bmatrix} x_{11} & x_{12} & x_{13} \\ x_{21} & x_{22} & x_{23} \\ x_{31} & x_{32} & x_{33} \end{bmatrix}, \begin{bmatrix} \frac{\partial L}{\partial o_{11}} & \frac{\partial L}{\partial o_{12}} \\ \frac{\partial L}{\partial o_{21}} & \frac{\partial L}{\partial o_{22}} \end{bmatrix} \right)$$

$$\frac{dL}{dw_{11}} = \frac{\partial L}{\partial o_{11}} \cdot x_{11} + \frac{\partial L}{\partial o_{12}} \cdot x_{12} + \frac{\partial L}{\partial o_{21}} \cdot x_{21} + \frac{\partial L}{\partial o_{22}} \cdot x_{22}$$

$$\frac{dL}{dw_{12}} = \frac{\partial L}{\partial o_{11}} \cdot x_{12} + \frac{\partial L}{\partial o_{12}} \cdot x_{13} + \frac{\partial L}{\partial o_{21}} \cdot x_{22} + \frac{\partial L}{\partial o_{22}} \cdot x_{23}$$

$$\frac{dL}{dw_{21}} = \frac{\partial L}{\partial o_{11}} \cdot x_{21} + \frac{\partial L}{\partial o_{12}} \cdot x_{22} + \frac{\partial L}{\partial o_{21}} \cdot x_{31} + \frac{\partial L}{\partial o_{22}} \cdot x_{32}$$

$$\frac{dL}{dw_{22}} = \frac{\partial L}{\partial o_{11}} \cdot x_{22} + \frac{\partial L}{\partial o_{12}} \cdot x_{23} + \frac{\partial L}{\partial o_{21}} \cdot x_{32} + \frac{\partial L}{\partial o_{22}} \cdot x_{33}$$

Convolution Forward Pass

$$o_{11} = w_{11}x_{11} + w_{12}x_{12} + w_{21}x_{21} + w_{22}x_{22}$$

$$o_{12} = w_{11}x_{12} + w_{12}x_{13} + w_{21}x_{22} + w_{22}x_{23}$$

$$o_{21} = w_{11}x_{21} + w_{12}x_{22} + w_{21}x_{31} + w_{22}x_{32}$$

$$o_{22} = w_{11}x_{22} + w_{12}x_{23} + w_{21}x_{32} + w_{22}x_{33}$$

Weight-Change Rule

$$w_{11}^{t+1} = w_{11}^{t} - \alpha \frac{dL}{dw_{11}}$$

$$w_{21}^{t+1} = w_{21}^{t} - \alpha \frac{dL}{dw_{21}}$$

$$w_{12}^{t+1} = w_{12}^{t} - \alpha \frac{dL}{dw_{12}}$$

$$w_{22}^{t+1} = w_{22}^{t} - \alpha \frac{dL}{dw_{22}}$$

Backpropagation in CNNs

Worked Example

Given the input image, kernel, and expected output shown below.

(1) Calculate the output of this convolutional layer

(2) Using a learning rate of $\alpha = \frac{1}{4}$ and SSE, perform the gradient descent algorithm.

Input

1	0	0
1	1	0
0	1	1

Kernel

1	2
0	1

Target

2	0
2	2

Backpropagation in CNNs

Input

1	0	0
1	1	0
0	1	1

Kernel

1	2
0	1

Target

2	0
2	2

Learning Rate $\alpha = \frac{1}{4}$

SSE = $\frac{1}{2}\sum(o - o')^2$

Backpropagation in CNNs

Input

1	0	0
1	1	0
0	1	1

Kernel

$\frac{1}{2}$	$\frac{3}{2}$
0	$\frac{1}{2}$

Target

2	0
2	2

Learning Rate $\alpha = \frac{1}{4}$

SSE = $\frac{1}{2}\sum(o - o')^2$