System Schematic

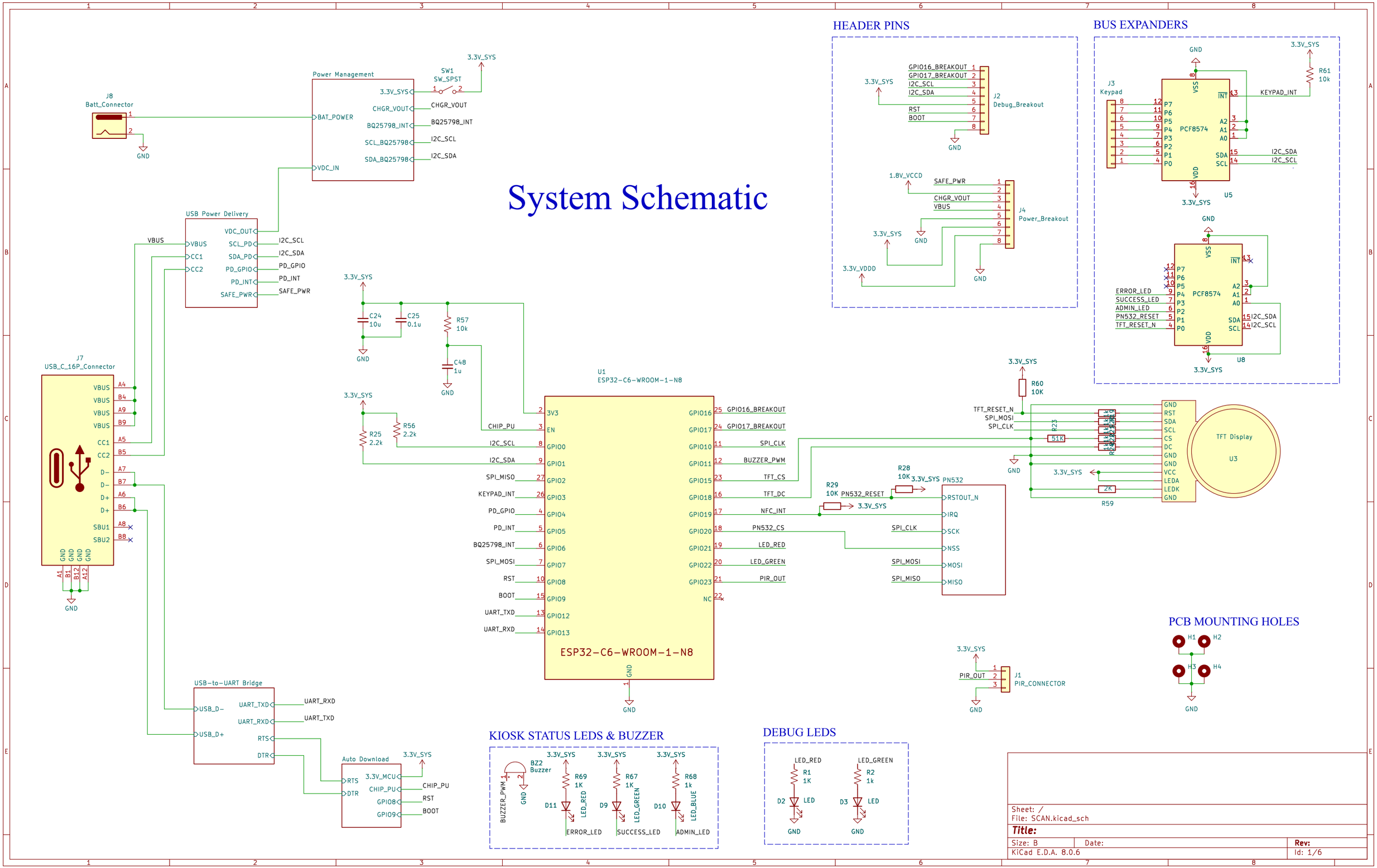

Power Management

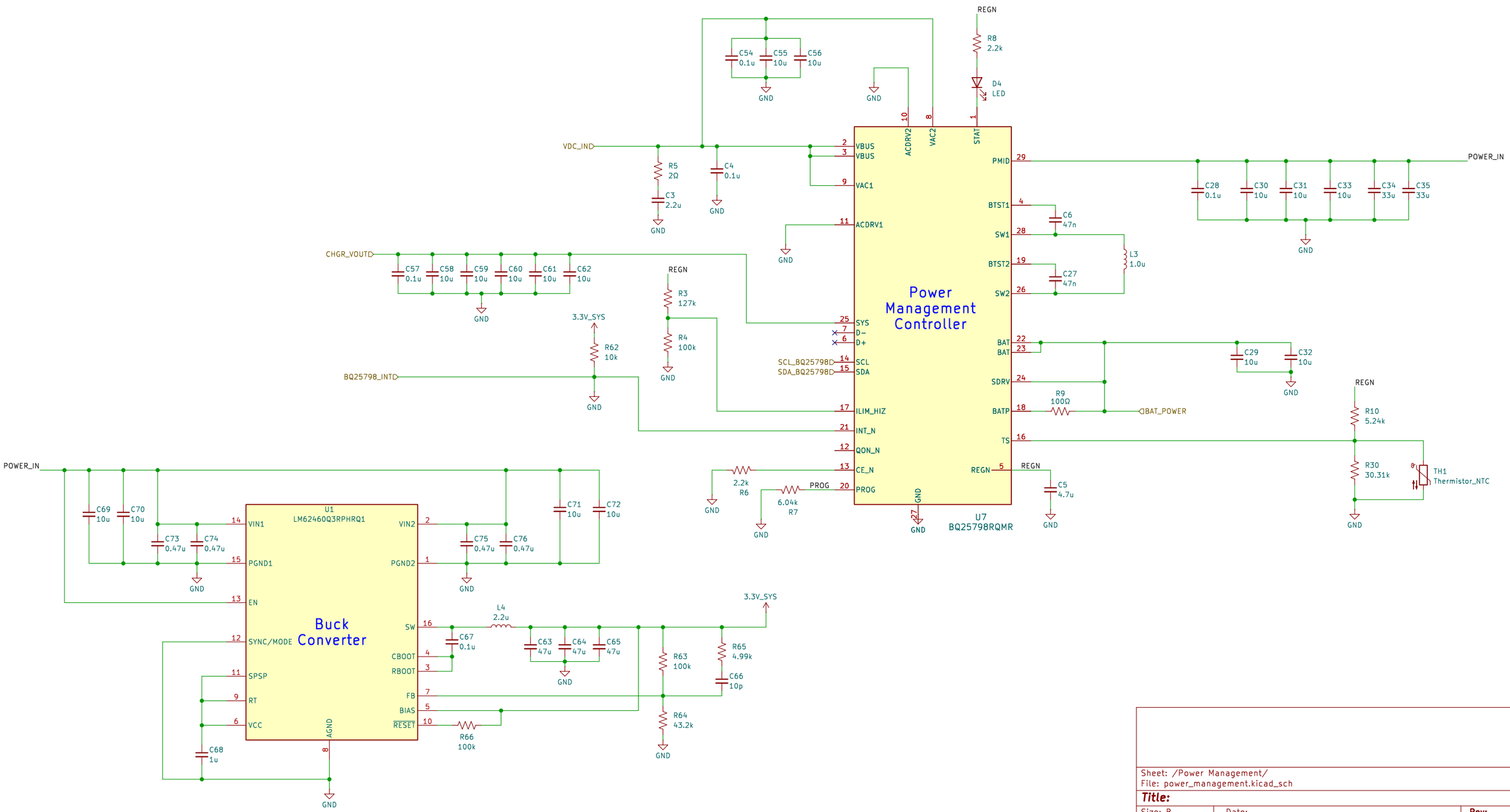

Sheet: /Power Management/
File: power_management.kicad_sch

Title:

Size: B	Date:	Rev:
KiCad E.D.A. 8.0.6		Id: 2/6

Auto Download

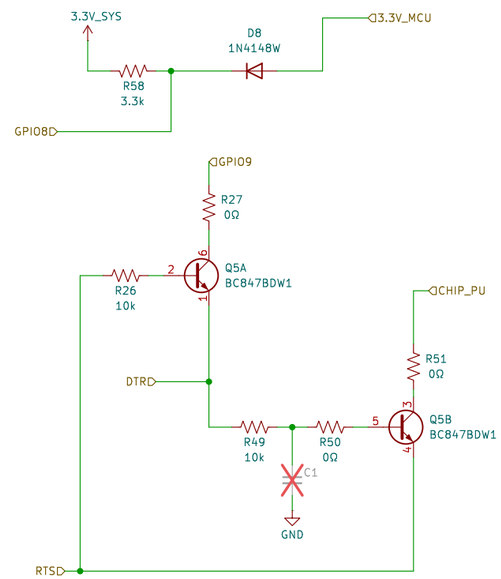

Sheet: /Auto Download/
File: auto_download.kicad_sch

Title:

Size: B	Date:	Rev:
KiCad E.D.A. 8.0.6		Id: 3/6

USB Power Delivery

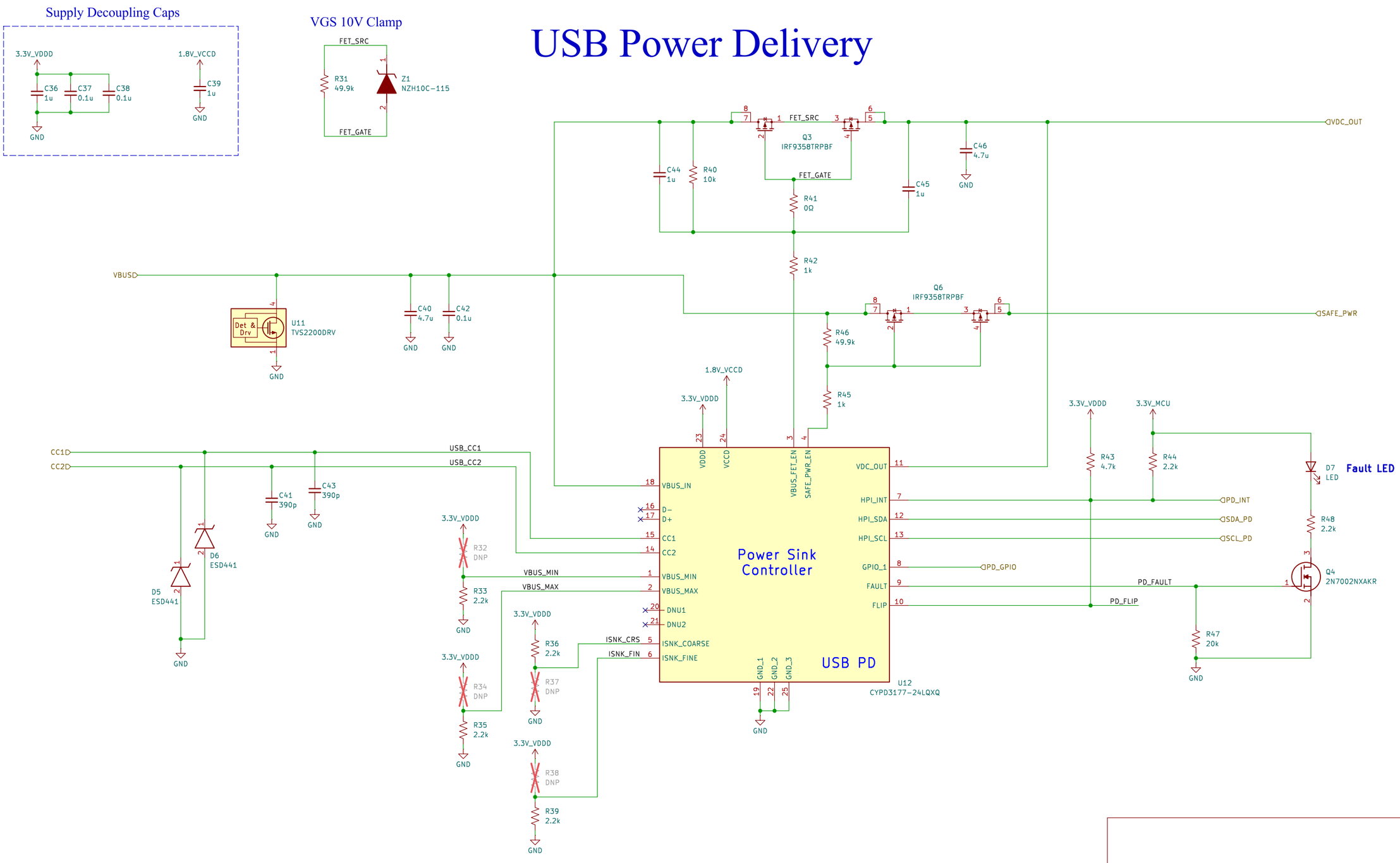

Sheet: /USB Power Delivery/
File: usb_power.kicad_sch

Title:

Size: B	Date:	Rev:
KiCad E.D.A. 8.0.6		Id: 4/6

USB-to-UART Bridge

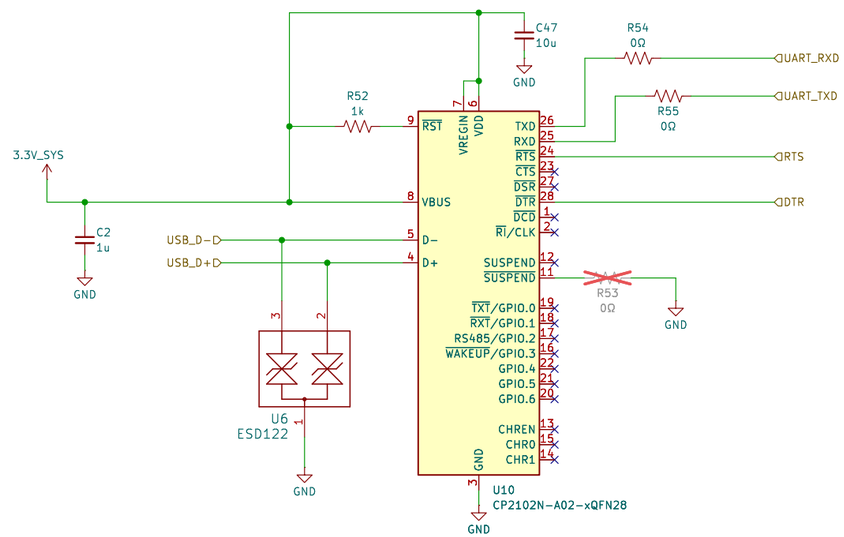

Sheet: /USB-to-UART Bridge/
File: usb_uart.kicad_sch

Title:

Size: B	Date:	Rev:
KiCad E.D.A. 8.0.6		Id: 5/6

NFC Reader

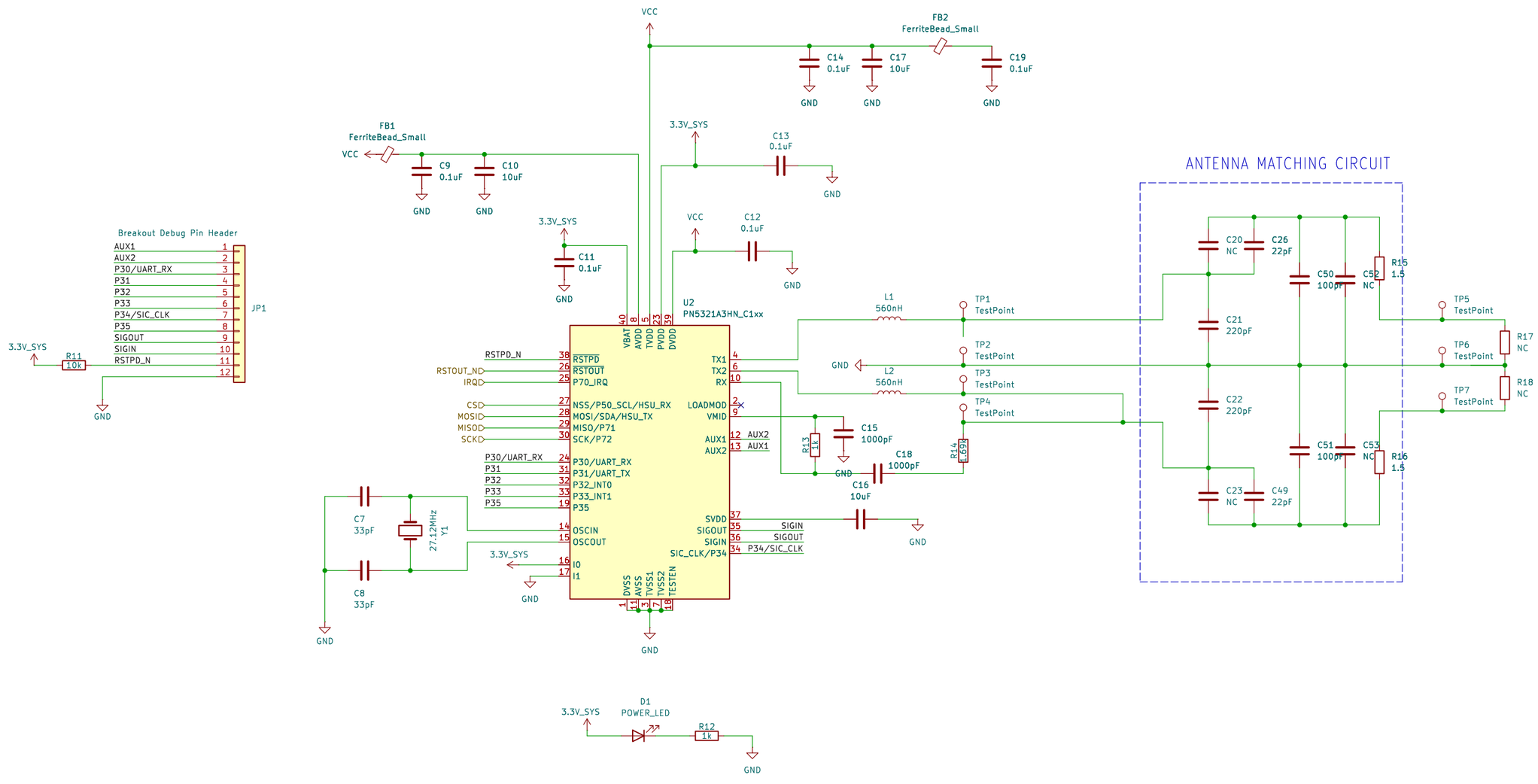

Sheet: /PN532/
File: nfc_reader.kicad_sch

Title:

Size: B	Date:	Rev:
KiCad E.D.A. 8.0.6		Id: 6/6