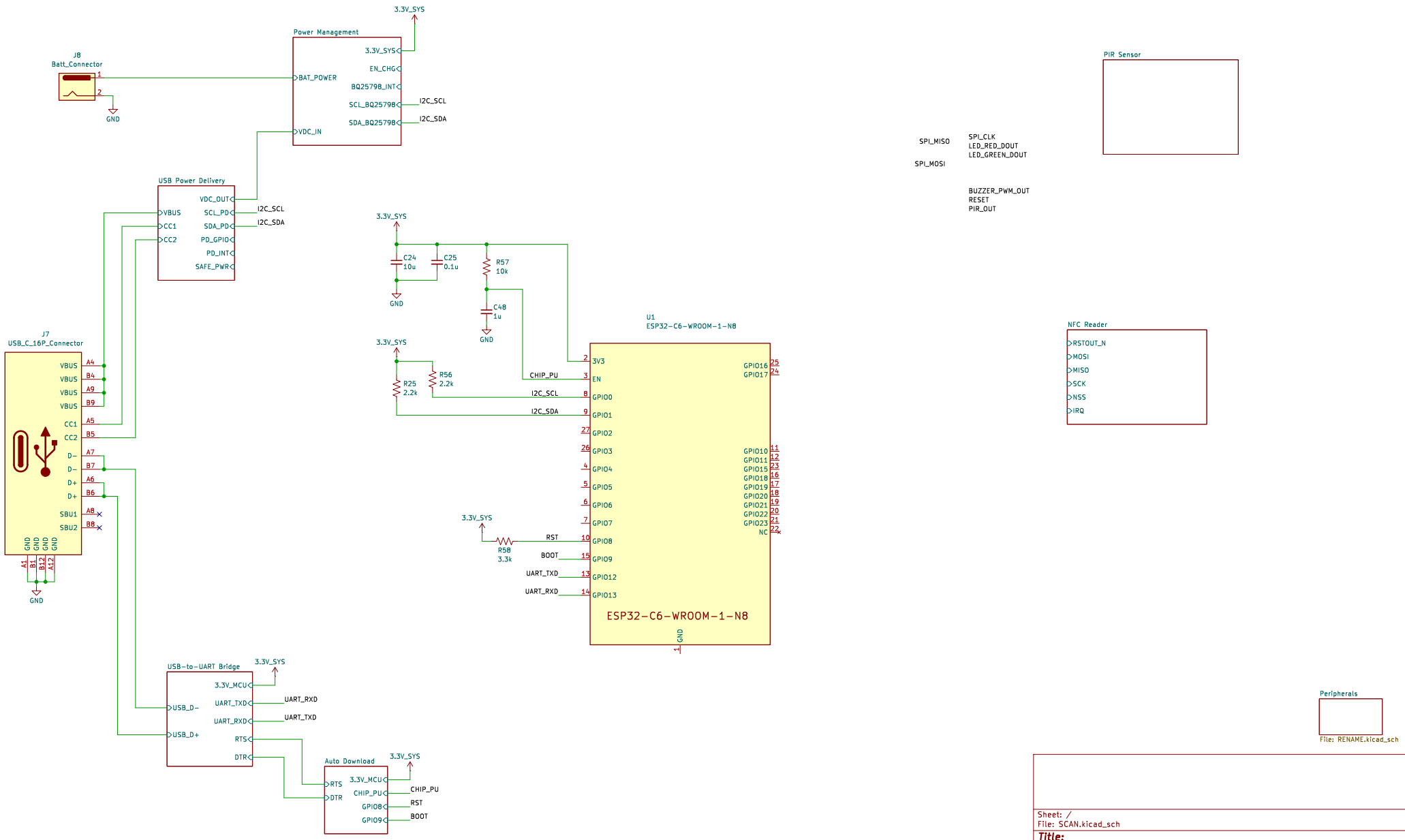
Power Management
3.3V_SYS
EN_CHG
BQ25798_INT
SCL_BQ25798
SDA_BQ25798
BAT_POWER
VDC_IN
I2C_SCL
I2C_SDA
J8
Batt_Connector
GND
USB Power Delivery
VDC_OUT
SCL_PD
SDA_PD
PD_GPIO
PD_INT
SAFE_PWR
VBUS
CC1
CC2
J7
USB_C_16P_Connector
D-
D+
SBU1
SBU2
C24
10u
C25
0.1u
R57
10k
C48
1u
R56
2.2k
R25
2.2k
U1
ESP32-C6-WROOM-1-N8
3V3
EN
GPIO0
GPIO1
GPIO2
GPIO3
GPIO4
GPIO5
GPIO6
GPIO7
GPIO8
GPIO9
GPIO12
GPIO13
GPIO16
GPIO17
GPIO10
GPIO11
GPIO15
GPIO18
GPIO19
GPIO20
GPIO21
GPIO22
GPIO23
NC
CHIP_PU
RST
BOOT
UART_TXD
UART_RXD
R58
3.3k
USB-to-UART Bridge
3.3V_MCU
UART_TXD
UART_RXD
USB_D-
USB_D+
RTS
DTR
Auto Download
CHIP_PU
GPIO8
GPIO9
PIR Sensor
SPI_MISO
SPI_MOSI
SPI_CLK
LED_RED_DOUT
LED_GREEN_DOUT
BUZZER_PWM_OUT
RESET
PIR_OUT
NFC Reader
RSTOUT_N
MOSI
MISO
SCK
NSS
IRQ
Peripherals
File: RENAME.kicad_sch
Sheet: /
File: SCAN.kicad_sch
Title:
Size: B
Date:
Rev:
KiCad E.D.A. 8.0.6
Id: 1/10

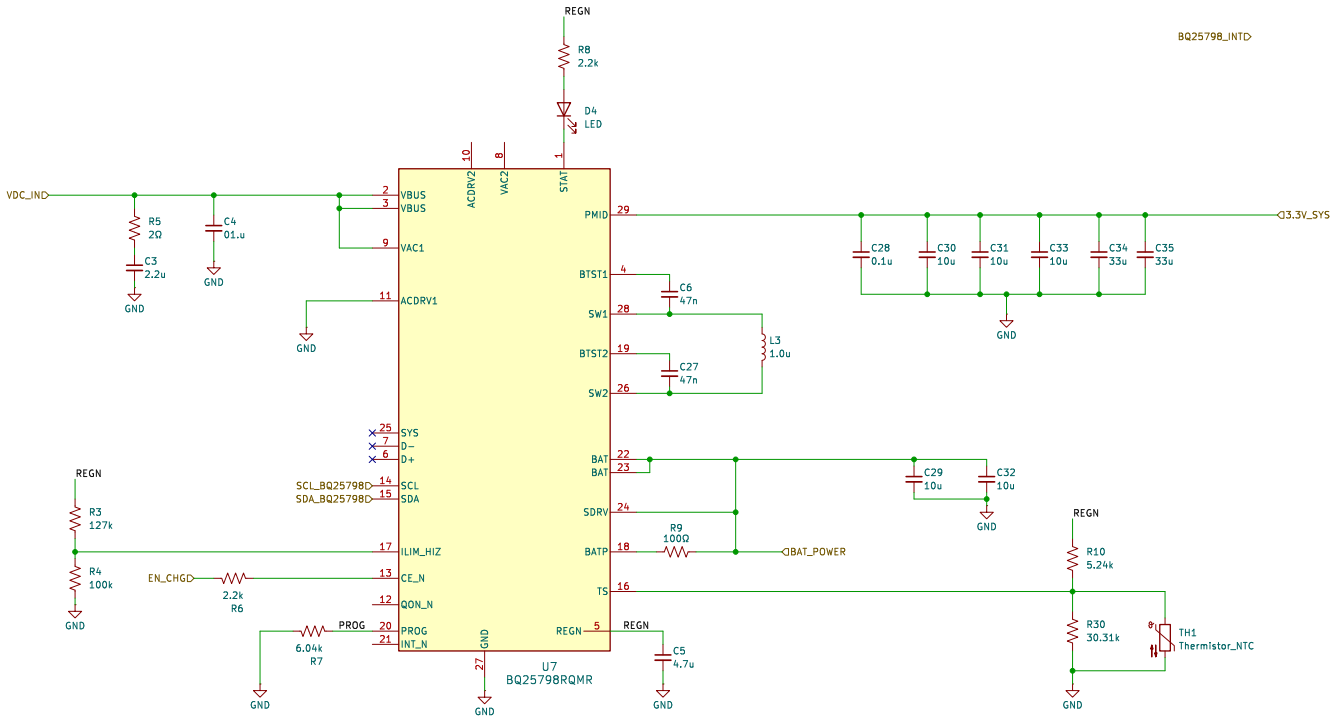

Sheet: /Power Management/
File: power_management.kicad_sch

Title:

Size: B	Date:	Rev:
KiCad E.D.A. 8.0.6		Id: 2/10

Auto Boot Mode

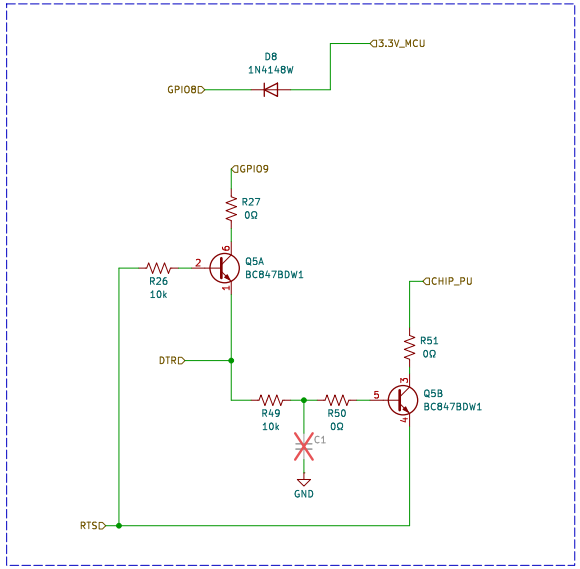

Sheet: /Auto Download/
File: auto_download.kicad_sch

Title:

Size: B	Date:	Rev:
KiCad E.D.A. 8.0.6		Id: 3/10

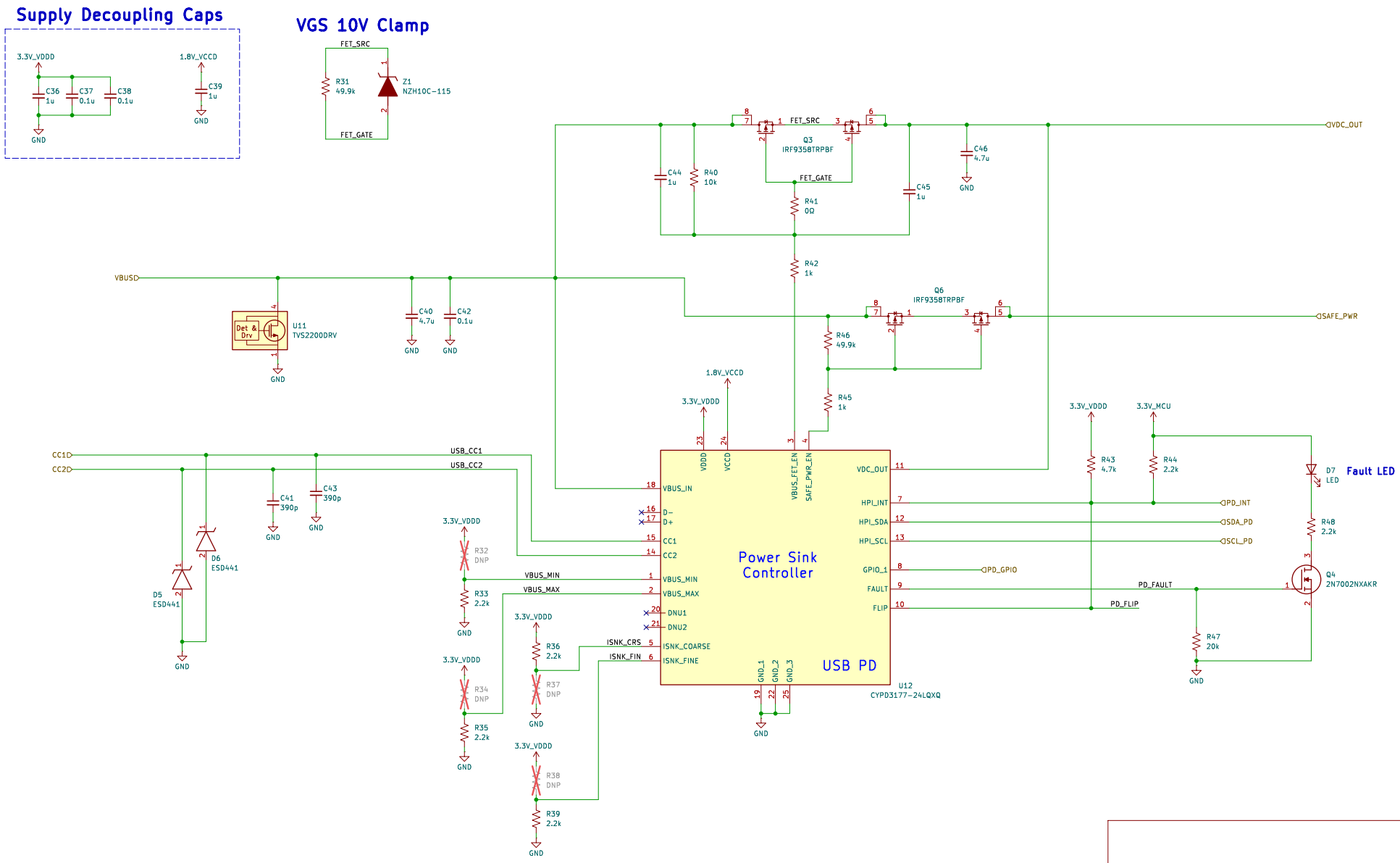

Sheet: /USB Power Delivery/
File: usb_power.kicad_sch

Title:

Size: B	Date:	Rev:
KiCad E.D.A. 8.0.6		Id: 4/10

INPUTS

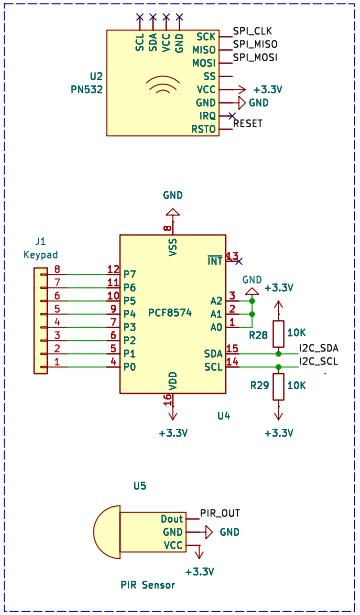

OUTPUTS

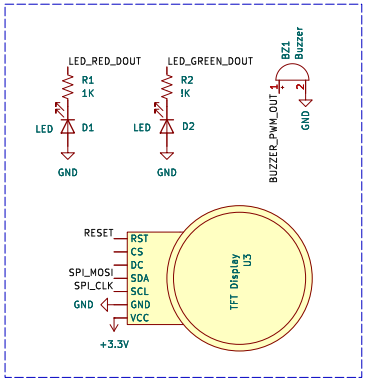

NFC

File: NFC.kicad_sch

PIR

File: PIR.kicad_sch

Sheet: /Peripherals/
File: RENAME.kicad_sch

Title:

Size: B	Date:	Rev:
KiCad E.D.A. 8.0.6		Id: 5/10

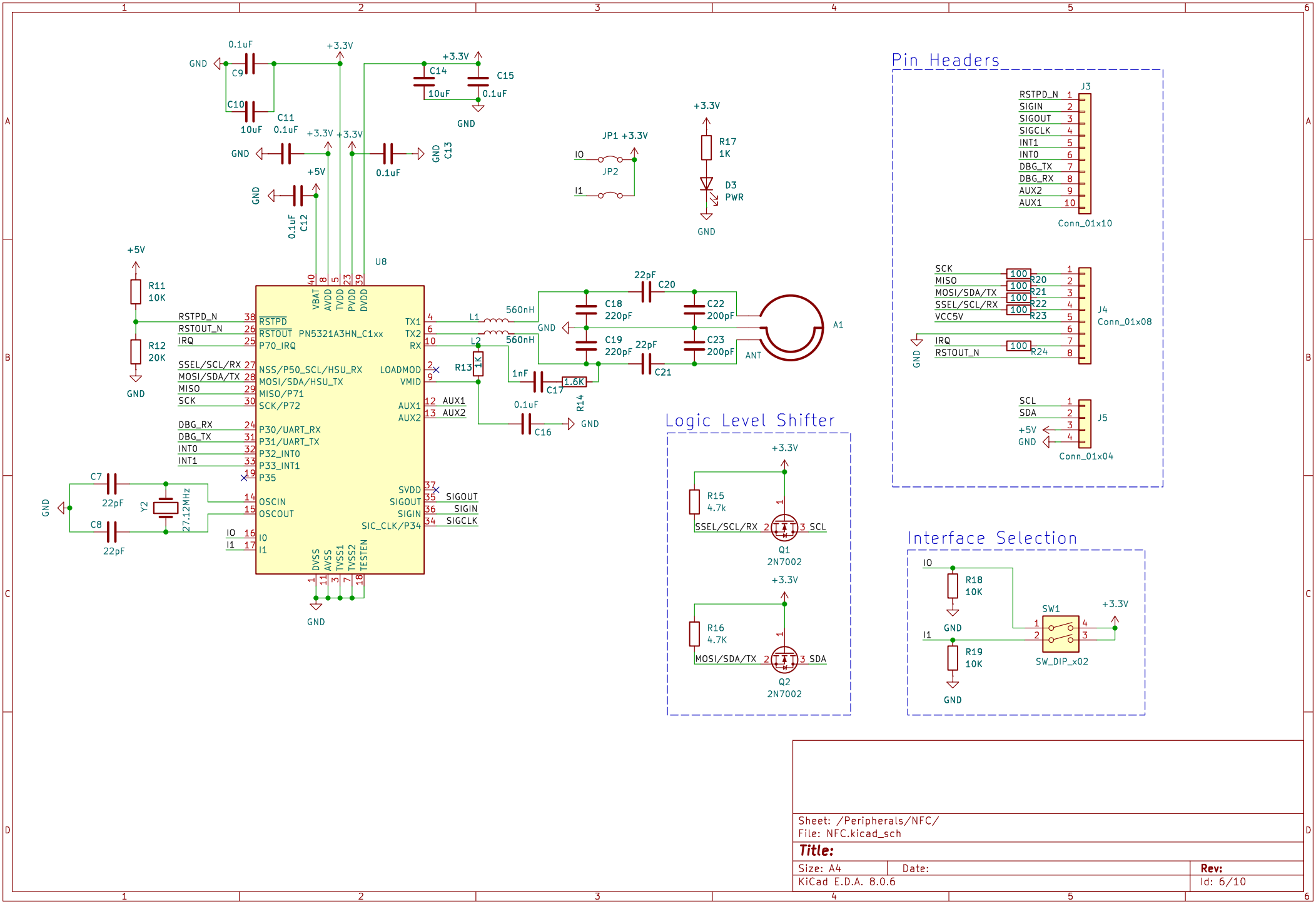

Sheet: /Peripherals/NFC/
File: NFC.kicad_sch

Title:

Size: A4	Date:	Rev:
KiCad E.D.A. 8.0.6		Id: 6/10

Sheet: /Peripherals/PIR/
File: PIR.kicad_sch

Title:

Size: A4	Date:	**Rev:**
KiCad E.D.A. 8.0.6		Id: 7/10

USB to UART

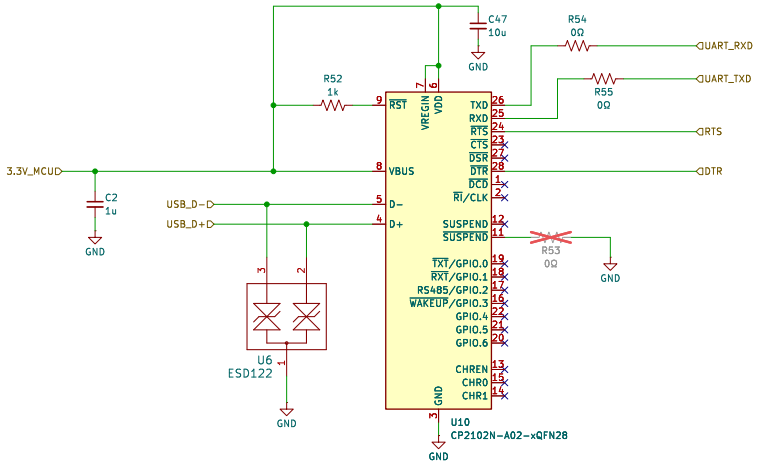

Sheet: /USB-to-UART Bridge/
File: usb_uart.kicad_sch

Title:

Size: B	Date:	Rev:
KiCad E.D.A. 8.0.6		Id: 8/10

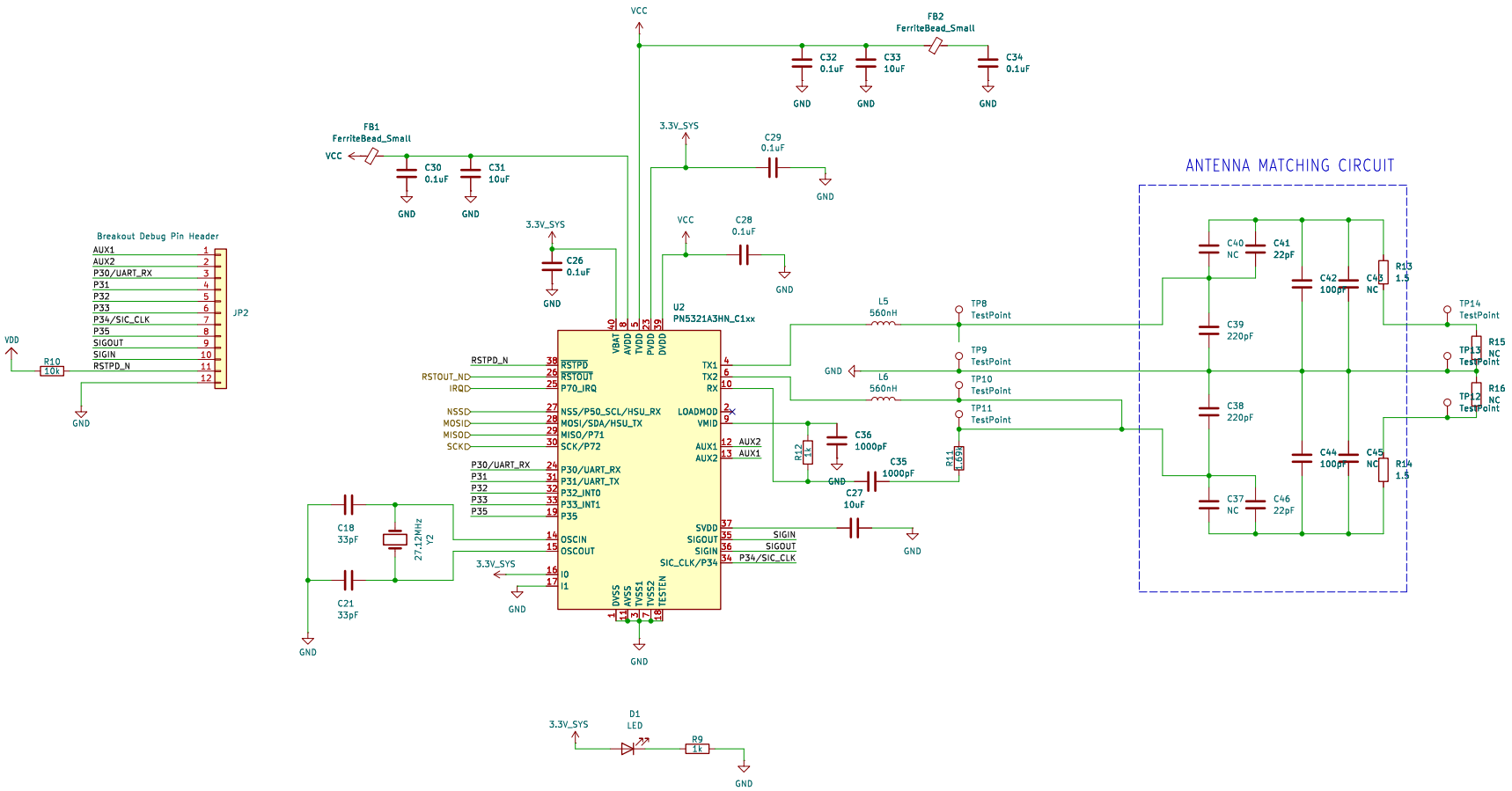

Sheet: /NFC Reader/
File: nfc_reader.kicad_sch

Title:

Size: B	Date:	Rev:
KiCad E.D.A. 8.0.6		Id: 9/10

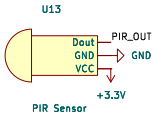

Sheet: /PIR Sensor/
File: pir_sensor.kicad_sch

Title:

Size: B	Date:	Rev:
KiCad E.D.A. 8.0.6		Id: 10/10