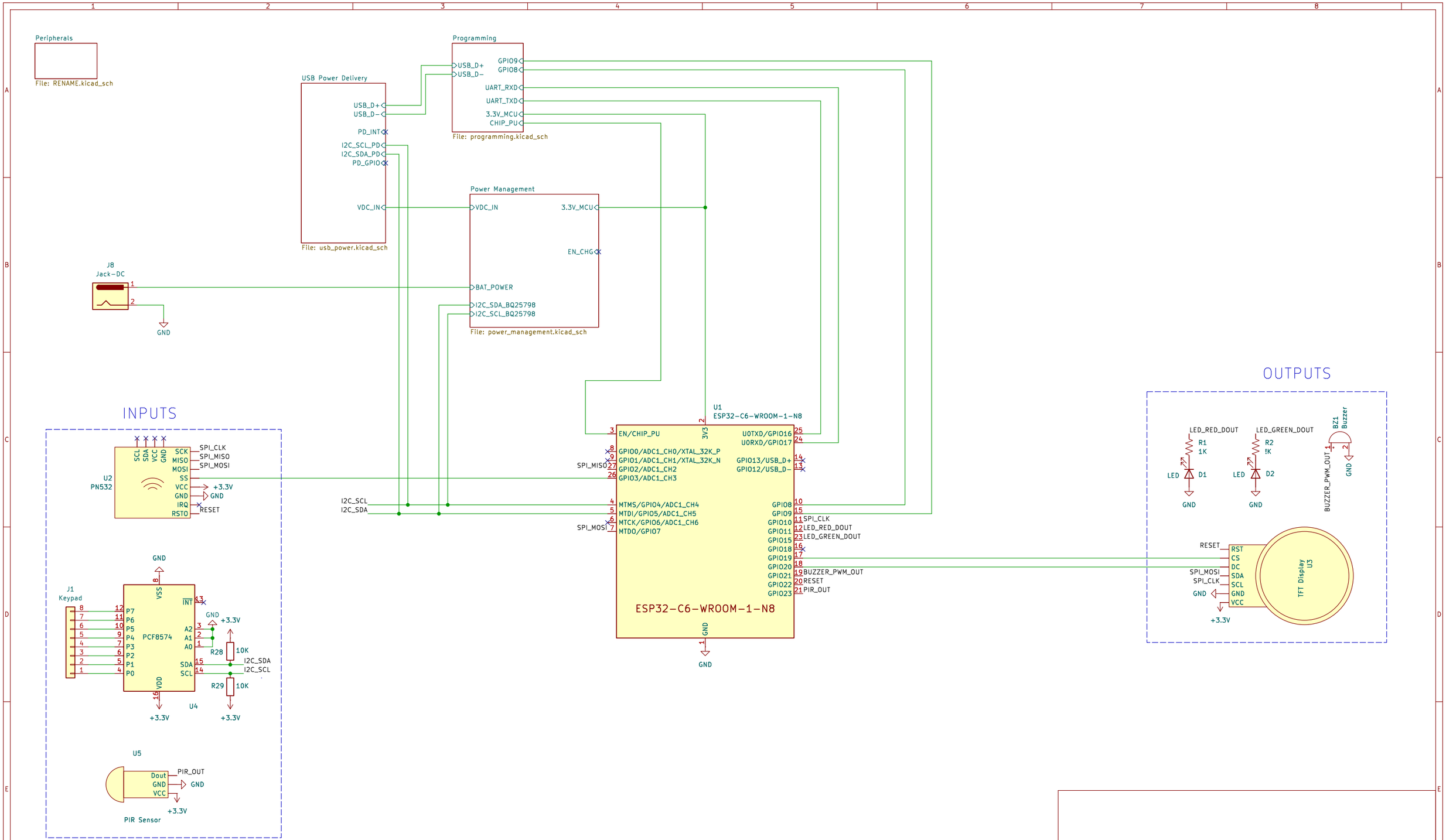

Sheet: /
File: SCAN.kicad_sch

Title:

Size: B	Date:	Rev:
KiCad E.D.A. 8.0.6		Id: 1/7

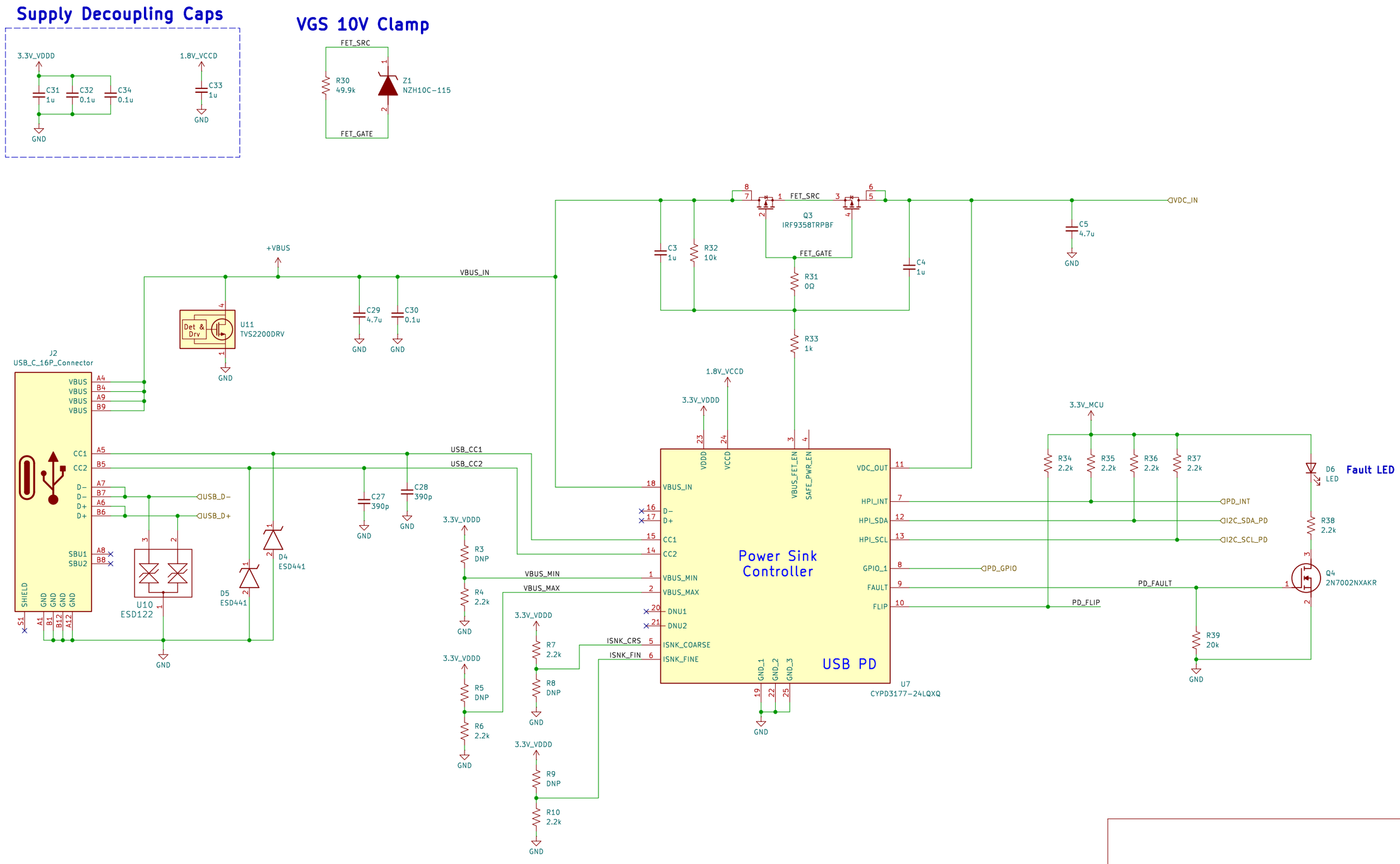

Sheet: /USB Power Delivery/
File: usb_power.kicad_sch

Title:

Size: B	Date:	Rev:
KiCad E.D.A. 8.0.6		Id: 2/7

USB to UART

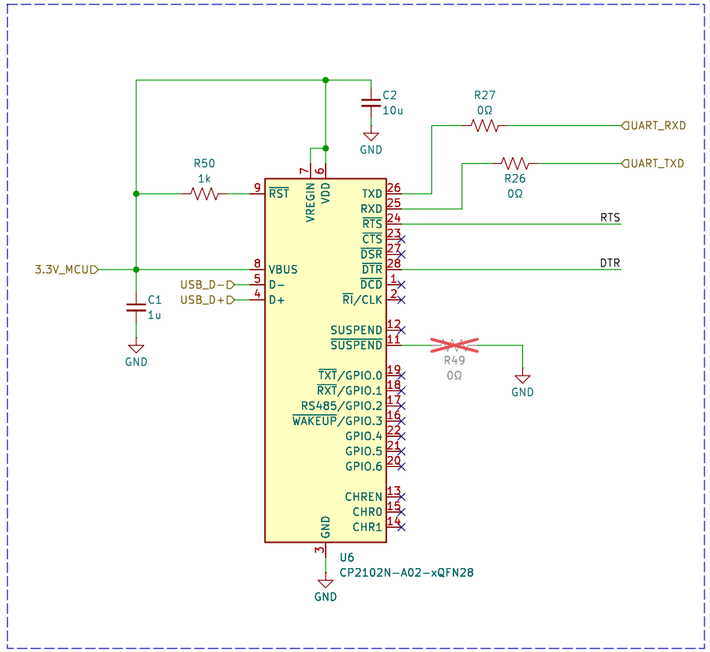

Auto Boot Mode

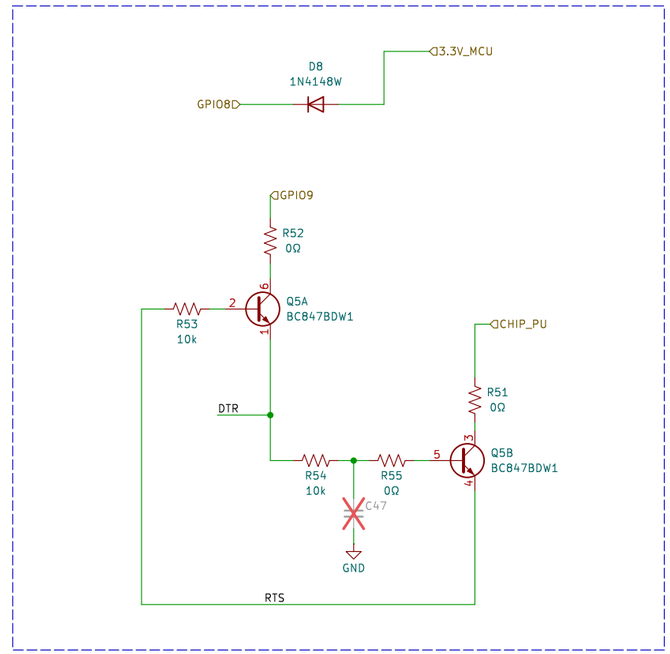

Sheet: /Programming/
File: programming.kicad_sch

Title:

Size: B	Date:	Rev:
KiCad E.D.A. 8.0.6		Id: 3/7

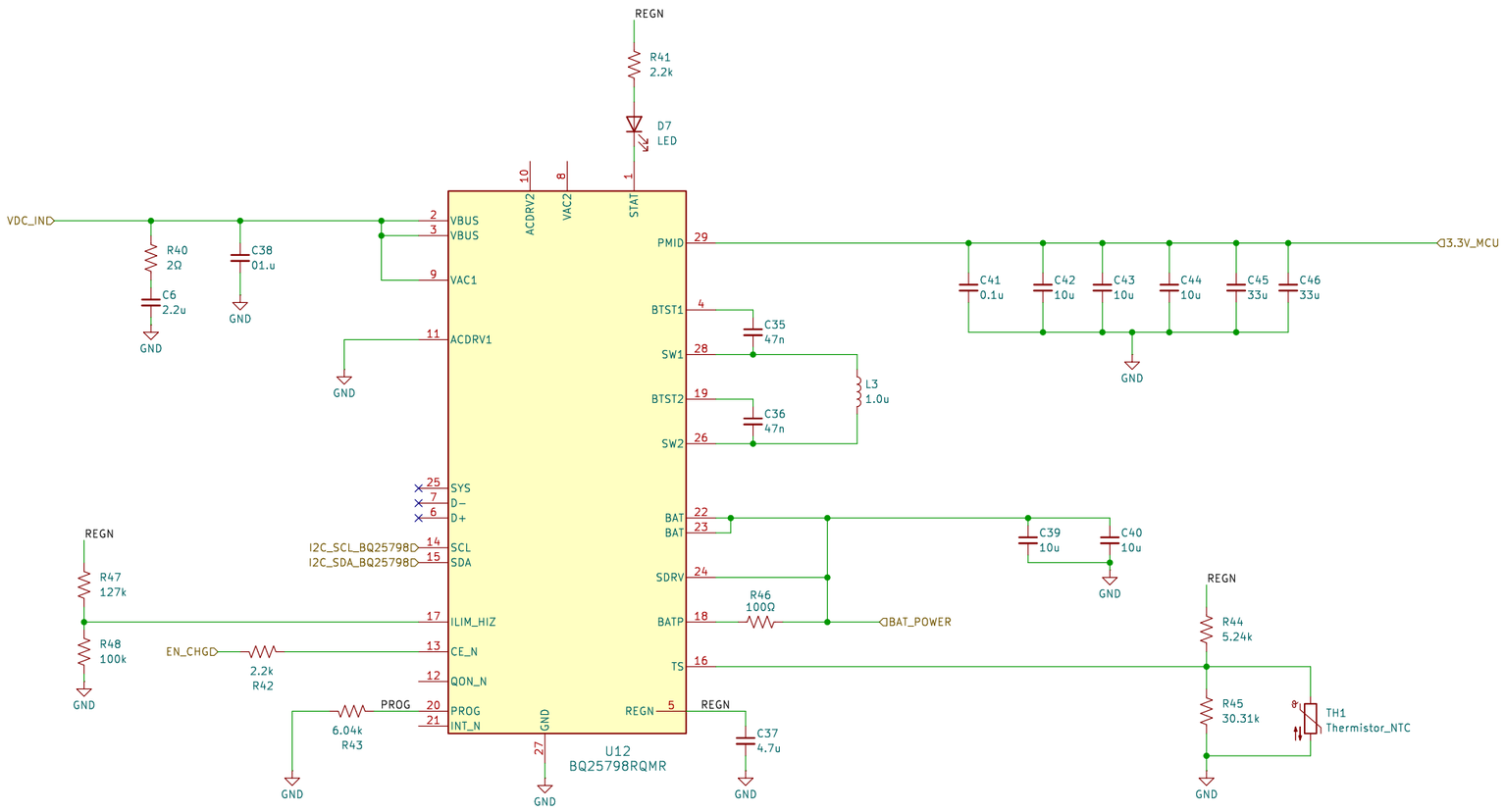

Sheet: /Power Management/
File: power_management.kicad_sch

Title:

Size: B	Date:	Rev:
KiCad E.D.A. 8.0.6		Id: 4/7

NFC

File: NFC.kicad_sch

PIR

File: PIR.kicad_sch

Sheet: /Peripherals/
File: RENAME.kicad_sch

Title:

Size: B	Date:	**Rev:**
KiCad E.D.A. 8.0.6		Id: 5/7

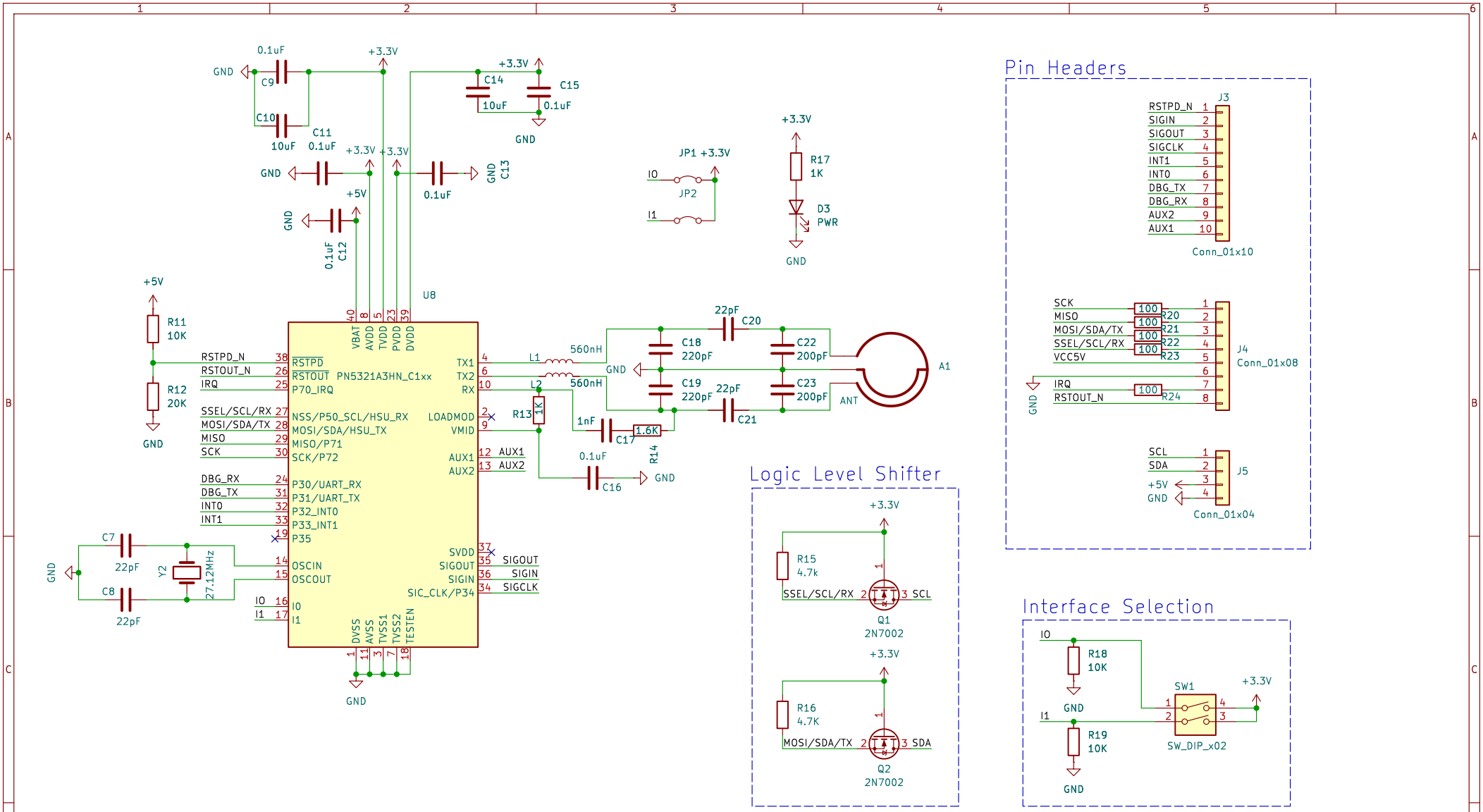

Sheet: /Peripherals/NFC/
File: NFC.kicad_sch

Title:

Size: A4	Date:	Rev:
KiCad E.D.A. 8.0.6		Id: 6/7

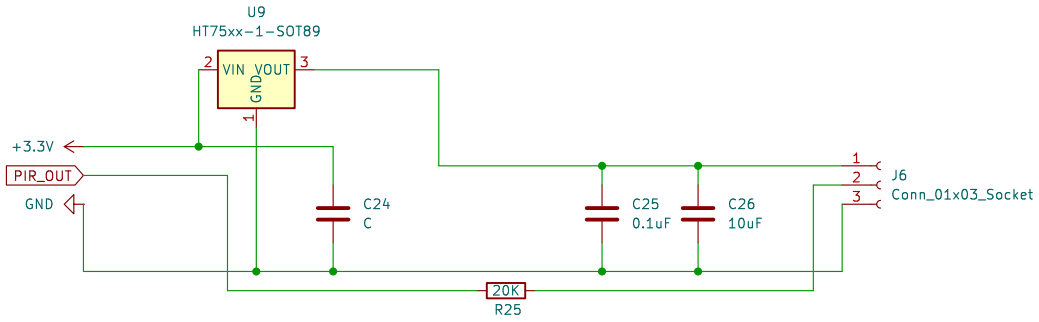

Sheet: /Peripherals/PIR/
File: PIR.kicad_sch

Title:

Size: A4	Date:	Rev:
KiCad E.D.A. 8.0.6		Id: 7/7