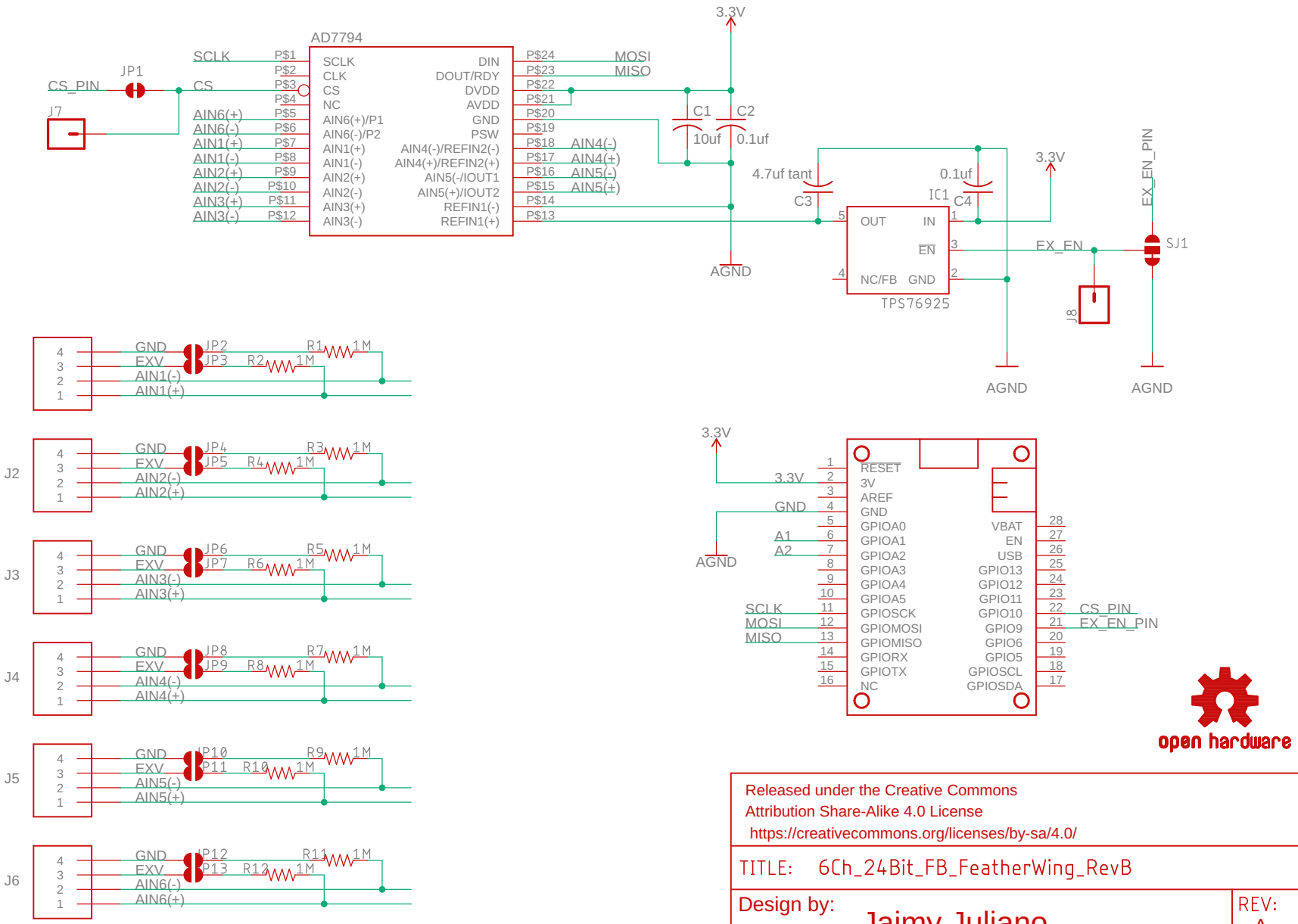

open hardware

Released under the Creative Commons
Attribution Share-Alike 4.0 License
https://creativecommons.org/licenses/by-sa/4.0/

TITLE: 6Ch_24Bit_FB_FeatherWing_RevB

Design by: Jaimy Juliano

REV: A

Date: 8/27/2019 11:02 PM

Sheet: 1/1