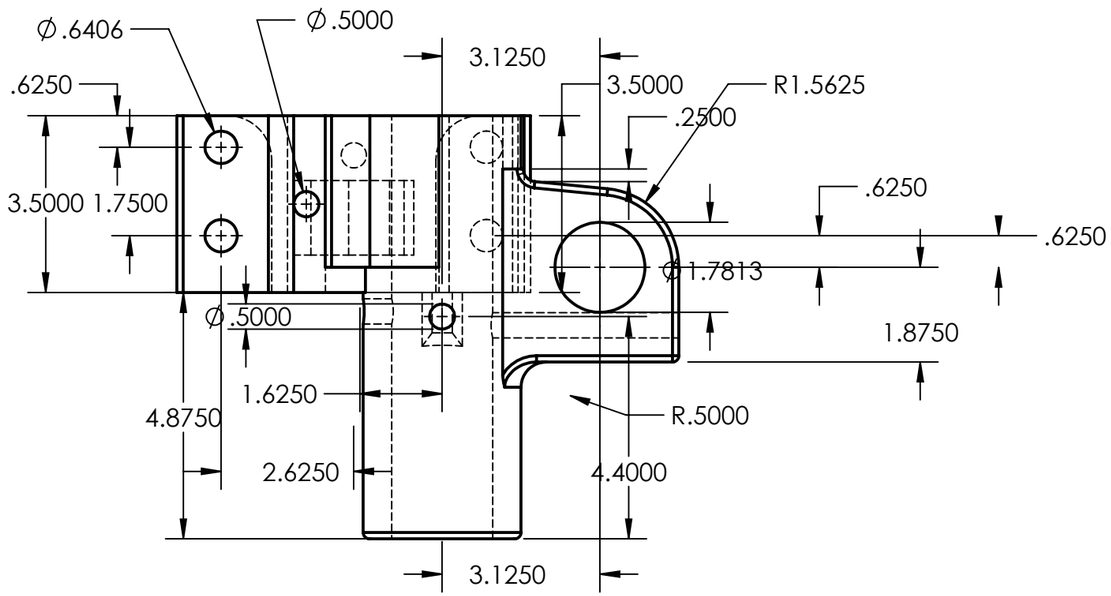

FILLTETS &ROUND 1/8R
UNLESS OTHERWISE
SPECIFIED

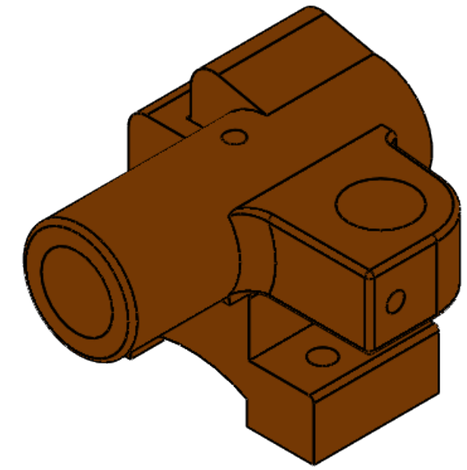

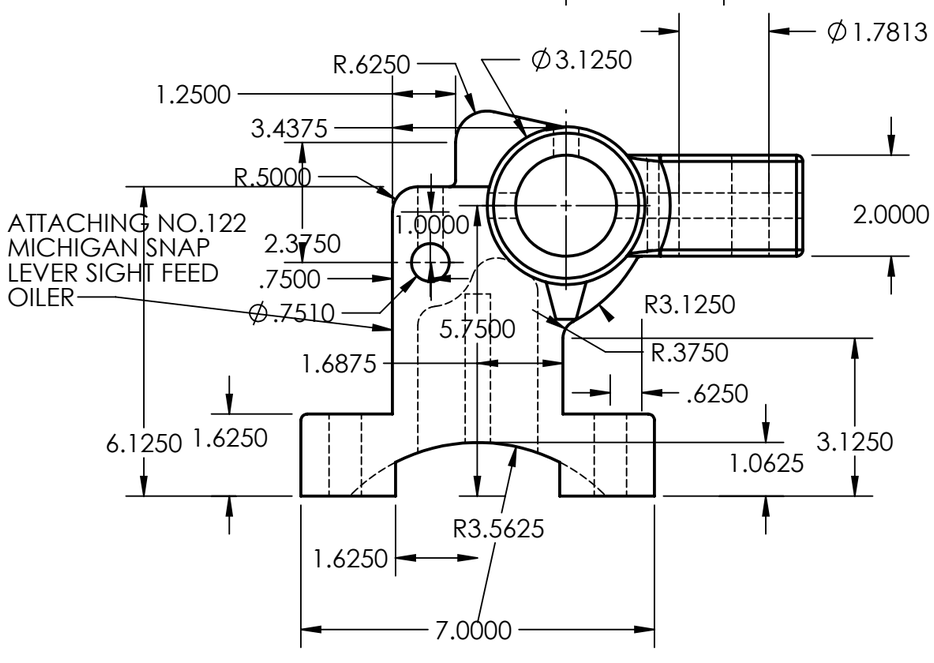

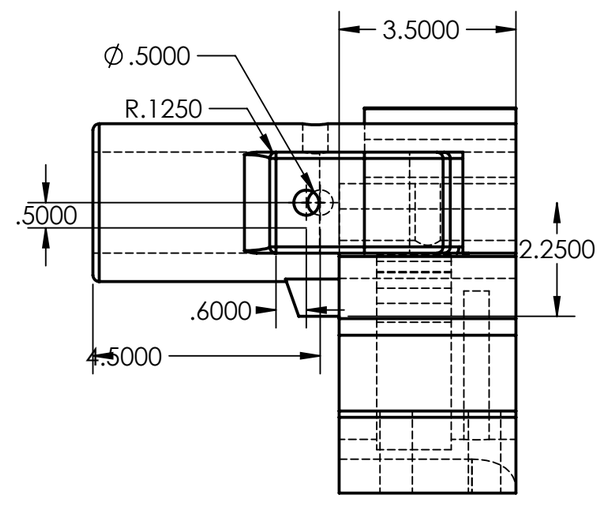

SOLIDWORKS Educational Product. For Instructional Use Only

PROPRIETARY AND CONFIDENTIAL

THE INFORMATION CONTAINED IN THIS DRAWING IS THE SOLE PROPERTY OF <INSERT COMPANY NAME HERE>. ANY REPRODUCTION IN PART OR AS A WHOLE WITHOUT THE WRITTEN PERMISSION OF <INSERT COMPANY NAME HERE> IS PROHIBITED.

NEXT ASSY	USED ON	UNLESS OTHERWISE SPECIFIED:		NAME	DATE
		DIMENSIONS ARE IN INCHES TOLERANCES: FRACTIONAL ± ANGULAR: MACH ± 0°30' TWO PLACE DECIMAL ± 0.01 THREE PLACE DECIMAL ± 0.003	DRAWN	QY LIU	
			CHECKED		
			ENG APPR.		
			MFG APPR.		
		INTERPRET GEOMETRIC TOLERANCING PER:ASME Y 14.5	Q.A.		
		MATERIAL CI	COMMENTS:		
		FINISH			
APPLICATION		DO NOT SCALE DRAWING			

NEW JERSEY INST. OF TECH.

TITLE:

BRACKET

SIZE	DWG. NO.	REV
B	DETAIL_DRAWINGS	

SCALE: 1:4 | WEIGHT: | SHEET 1 OF 1