Chapter 8

Encipherment Using Modern Symmetric-Key Ciphers

Copyright © The McGraw-Hill Companies, Inc. Permission required for reproduction or display.

Objectives

- To show how modern standard ciphers, such as DES or AES, can be used to encipher long messages.
- To discuss five modes of operation designed to be used with modern block ciphers.
- To define which mode of operation creates stream ciphers out of the underlying block ciphers.
- To discuss the security issues and the error propagation of different modes of operation.
- To discuss two stream ciphers used for real-time processing of data.

8-1 USE OF MODERN BLOCK CIPHERS

Symmetric-key encipherment can be done using modern block ciphers. Modes of operation have been devised to encipher text of any size employing either DES or AES.

Topics discussed in this section:

8.1.1 Electronic Codebook (ECB) Mode
8.1.2 Cipher Block Chaining (CBC) Mode
8.1.3 Cipher Feedback (CFB) Mode
8.1.4 Output Feedback (OFB) Mode
8.1.5 Counter (CTR) Mode

8-1 Continued

Figure 8.1 ***Modes of operation***

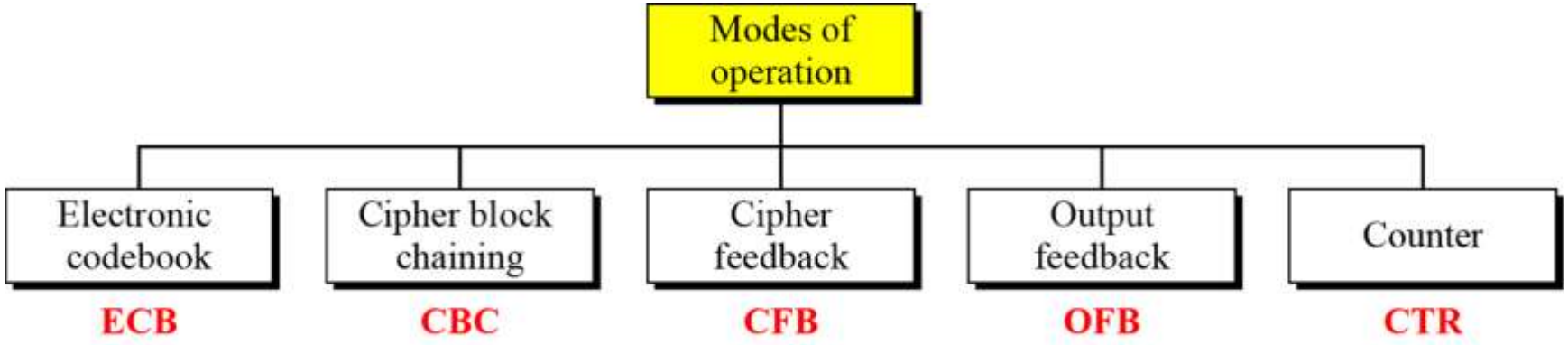

8.1.1 Electronic Codebook (ECB) Mode

The simplest mode of operation is called the electronic codebook (ECB) mode.

Encryption: $C_i = E_K(P_i)$ Decryption: $P_i = D_K(C_i)$

Figure 8.2 ***Electronic codebook (ECB) mode***

E: Encryption D: Decryption
P_i: Plaintext block i C_i: Ciphertext block i
K: Secret key

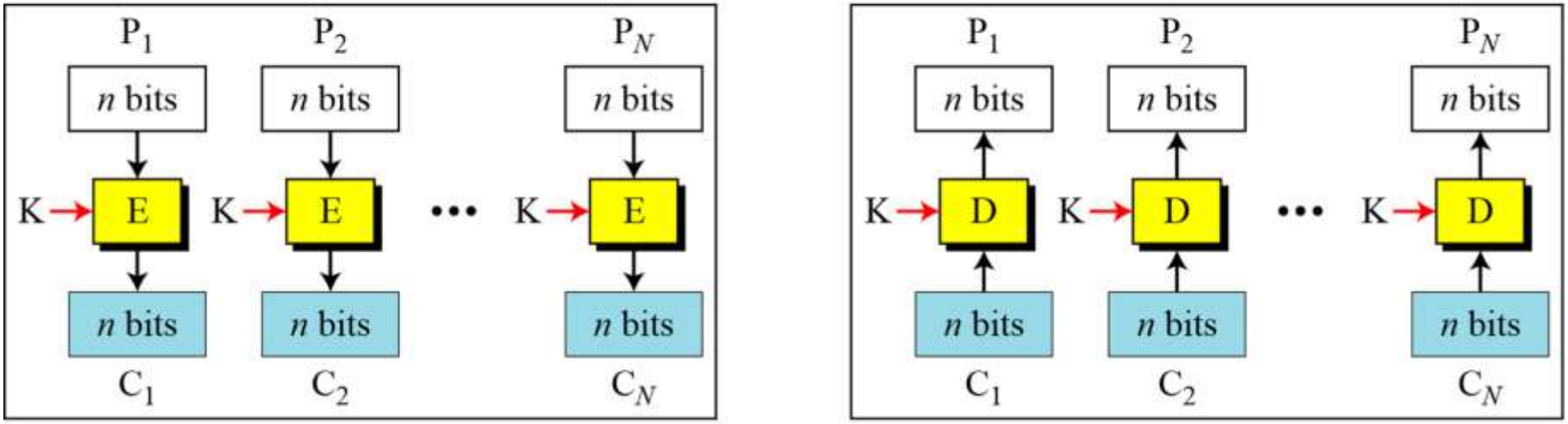

Encryption Decryption

8.1.1 Continued

Example 8.1

It can be proved that each plaintext block at Alice's site is exactly recovered at Bob's site. Because encryption and decryption are inverses of each other,

Encryption: $C_i = E_K(P_i)$ Decryption: $P_i = D_K(C_i)$

Example 8.2

This mode is called electronic codebook because one can precompile 2^K codebooks (one for each key) in which each codebook has 2^n entries in two columns. Each entry can list the plaintext and the corresponding ciphertext blocks. However, if *K* and *n* are large, the codebook would be far too large to precompile and maintain.

8.1.1 Continued

Example 8.3

Assume that Eve works in a company a few hours per month (her monthly payment is very low). She knows that the company uses several blocks of information for each employee in which the seventh block is the amount of money to be deposited in the employee's account. Eve can intercept the ciphertext sent to the bank at the end of the month, replace the block with the information about her payment with a copy of the block with the information about the payment of a full-time colleague. Each month Eve can receive more money than she deserves.

8.1.1 Continued

Error Propagation

A single bit error in transmission can create errors in several in the corresponding block. However, the error does not have any effect on the other blocks.

Algorithm 8.1 *Encryption for ECB mode*

```
ECB_Encryption (K, Plaintext blocks)
{
    for (i = 1 to N)
    {
        C_i ← E_K (P_i)
    }
    return Ciphertext blocks
}
```

8.1.1 Continued

Ciphertext Stealing

A technique called ciphertext stealing (CTS) can make it possible to use ECB mode without padding. In this technique the last two plaintext blocks, P_{N-1} and P_N, are encrypted differently and out of order, as shown below, assuming that P_{N-1} has n bits and P_N has m bits, where $m \leq n$.

$$X = E_K(P_{N-1}) \quad \rightarrow \quad C_N = head_m(X)$$

$$Y = P_N \mid tail_{n-m}(X) \quad \rightarrow \quad C_{N-1} = E_K(Y)$$

8.1.2 Cipher Block Chaining (CBC) Mode

In CBC mode, each plaintext block is exclusive-ored with the previous ciphertext block before being encrypted.

Figure 8.3 *Cipher block chaining (CBC) mode*

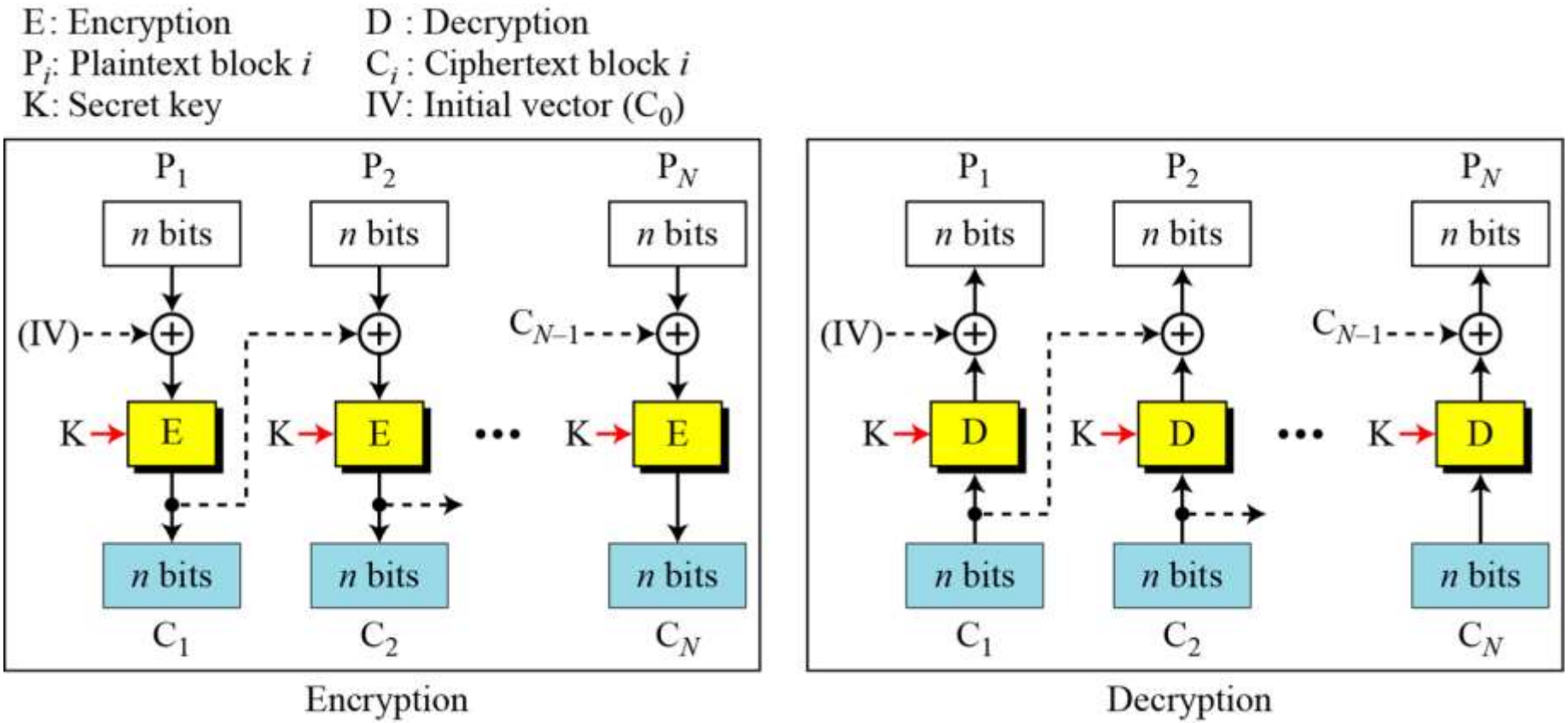

8.1.2 Continued

Figure 8.3 *Cipher block chaining (CBC) mode*

E: Encryption
P_i: Plaintext block i
K: Secret key

D : Decryption
C_i : Ciphertext block i
IV: Initial vector (C_0)

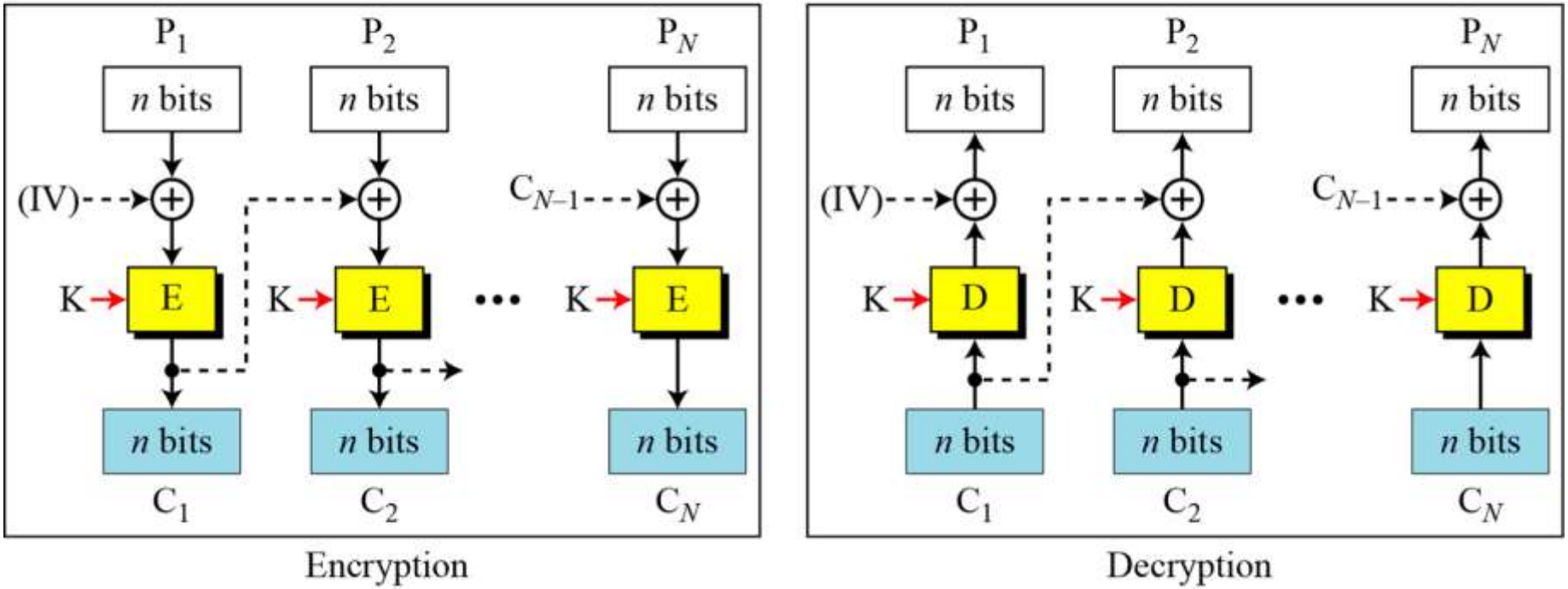

Encryption:	**Decryption:**
$C_0 = IV$	$C_0 = IV$
$C_i = E_K (P_i \oplus C_{i-1})$	$P_i = D_K (C_i) \oplus C_{i-1}$

8.1.2 Continued

Example 8.4

It can be proved that each plaintext block at Alice's site is recovered exactly at Bob's site. Because encryption and decryption are inverses of each other,

$$P_i = D_K(C_i) \oplus C_{i-1} = D_K(E_K(P_i \oplus C_{i-1})) \oplus C_{i-1} = P_i \oplus C_{i-1} \oplus C_{i-1} = P_i$$

Initialization Vector (IV)

The initialization vector (IV) should be known by the sender and the receiver.

8.1.2 Continued

Error Propagation

In CBC mode, a single bit error in ciphertext block C_j during transmission may create error in most bits in plaintext block P_j during decryption.

Algorithm 8.2 *Encryption algorithm for ECB mode*

```
CBC_Encryption (IV, K, Plaintext blocks)
{
    C0 ← IV
    for (i = 1 to N)
    {
        Temp ← Pi ⊕ Ci−1
        Ci ← EK (Temp)
    }
    return Ciphertext blocks
}
```

8.1.2 Continued

Ciphertext Stealing

The ciphertext stealing technique described for ECB mode can also be applied to CBC mode, as shown below.

$$
\begin{array}{lcl}
U = P_{N-1} \oplus C_{N-2} & \rightarrow & X = E_K(U) \rightarrow C_N = head_m(X) \\
V = P_N \mid pad_{n-m}(0) & \rightarrow & Y = X \oplus V \rightarrow C_{N-1} = E_K(Y)
\end{array}
$$

The head function is the same as described in ECB mode; the pad function inserts 0's.

8.1.3 Cipher Feedback (CFB) Mode

In some situations, we need to use DES or AES as secure ciphers, but the plaintext or ciphertext block sizes are to be smaller.

Figure 8.4 *Encryption in cipher feedback (CFB) mode*

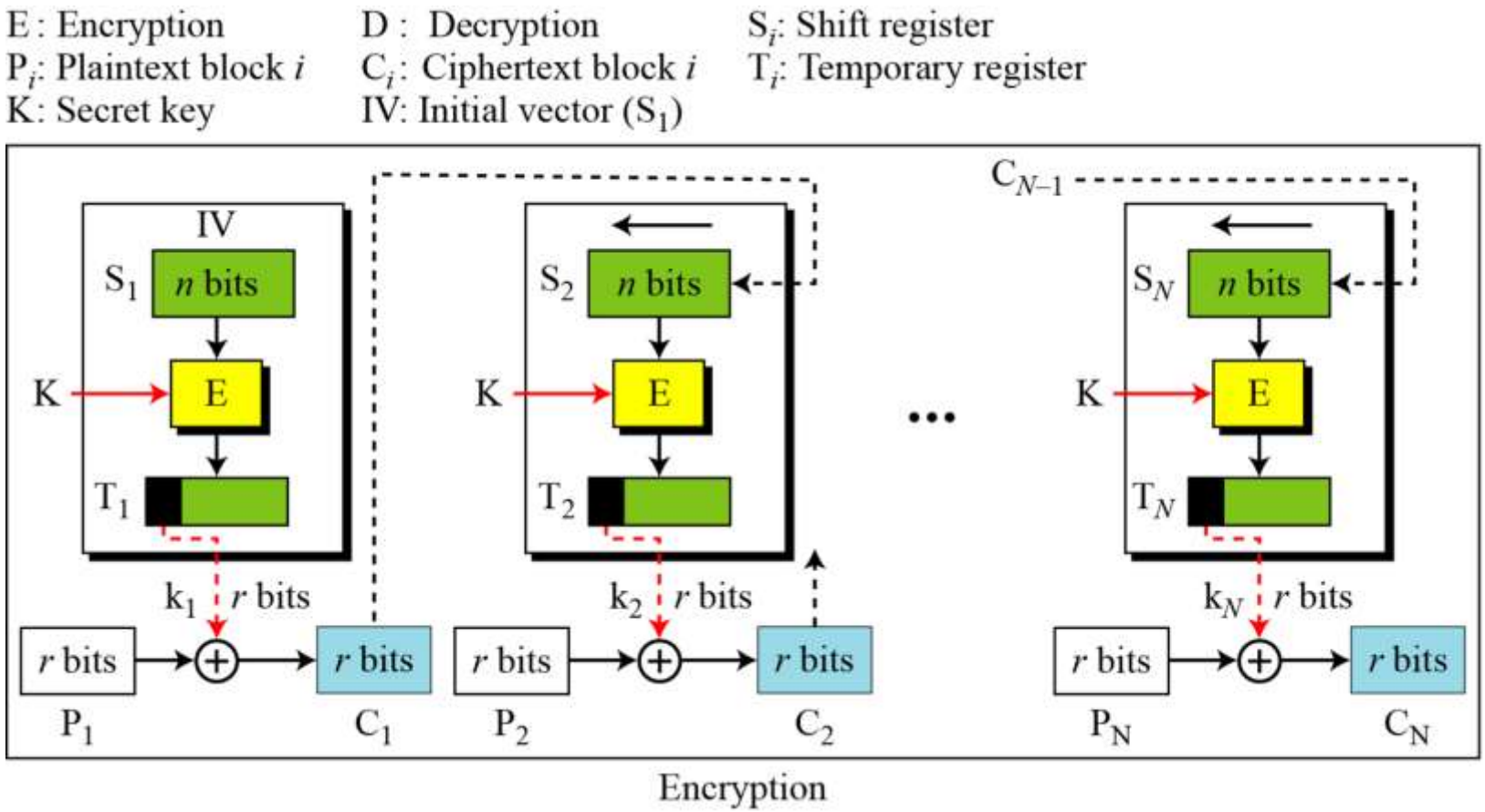

8.1.3 Continued

Note

In CFB mode, encipherment and decipherment use the encryption function of the underlying block cipher.

The relation between plaintext and ciphertext blocks is shown below:

Encryption: $C_i = P_i \oplus \text{SelectLeft}_r \{E_K [\text{ShiftLeft}_r (S_{i-1}) \mid C_{i-1})]\}$

Decryption: $P_i = C_i \oplus \text{SelectLeft}_r \{E_K [\text{ShiftLeft}_r (S_{i-1}) \mid C_{i-1})]\}$

8.1.3 Continued

CFB as a Stream Cipher

Figure 8.5 *Cipher feedback (CFB) mode as a stream cipher*

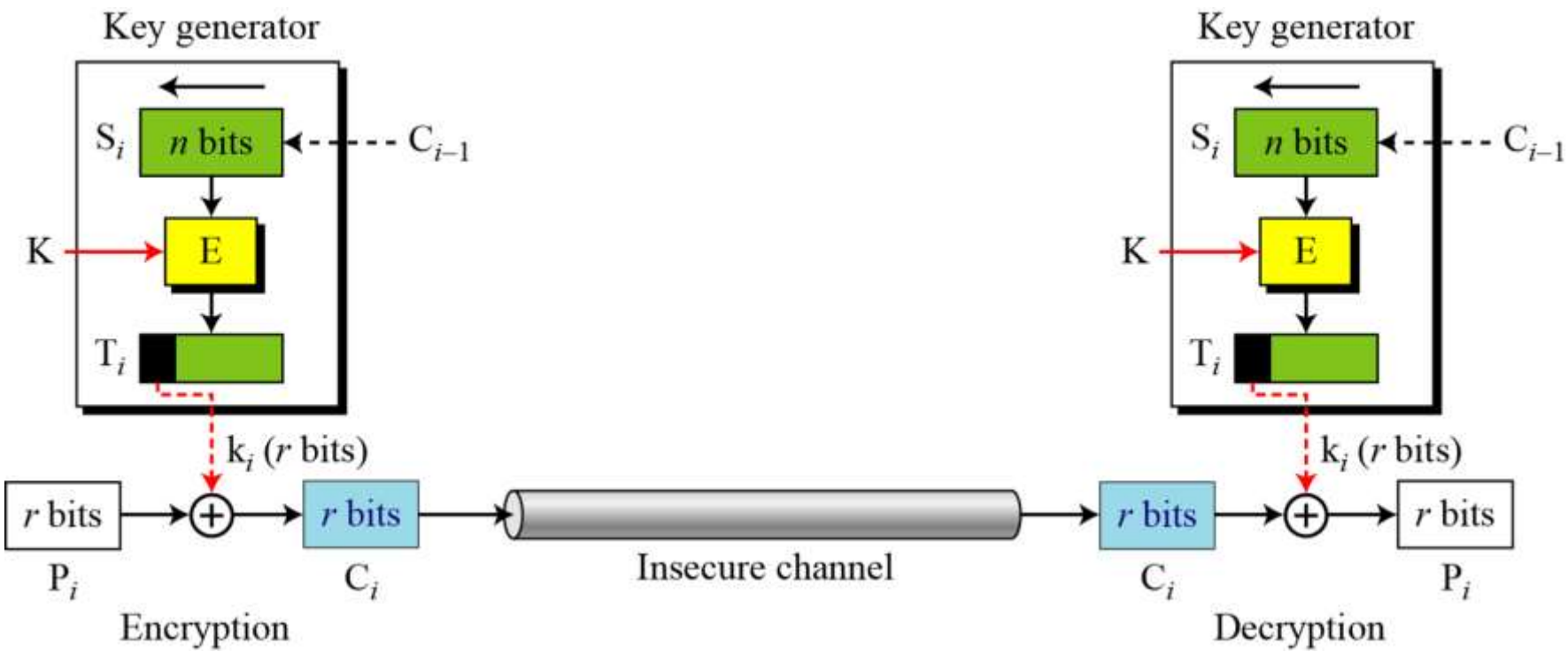

8.1.3 Continued

Algorithm 8.3 *Encryption algorithm for CFB*

```
CFB_Encryption (IV, K, r)
{
   i ← 1
   while (more blocks to encrypt)
   {
   input (P_i)
   if (i = 1)
      S ← IV
   else
      {
      Temp ← shiftLeft_r (S)
      S ← concatenate (Temp, C_{i-1})
      }
   T ← E_K(S)
   k_i ← selectLeft_r (T)
   C_i ← P_i ⊕ k_i
   output (C_i)
   i ← i + 1
   }
}
```

18.1.4 Output Feedback (OFB) Mode

In this mode each bit in the ciphertext is independent of the previous bit or bits. This avoids error propagation.

Figure 8.6 ***Encryption in output feedback (OFB) mode***

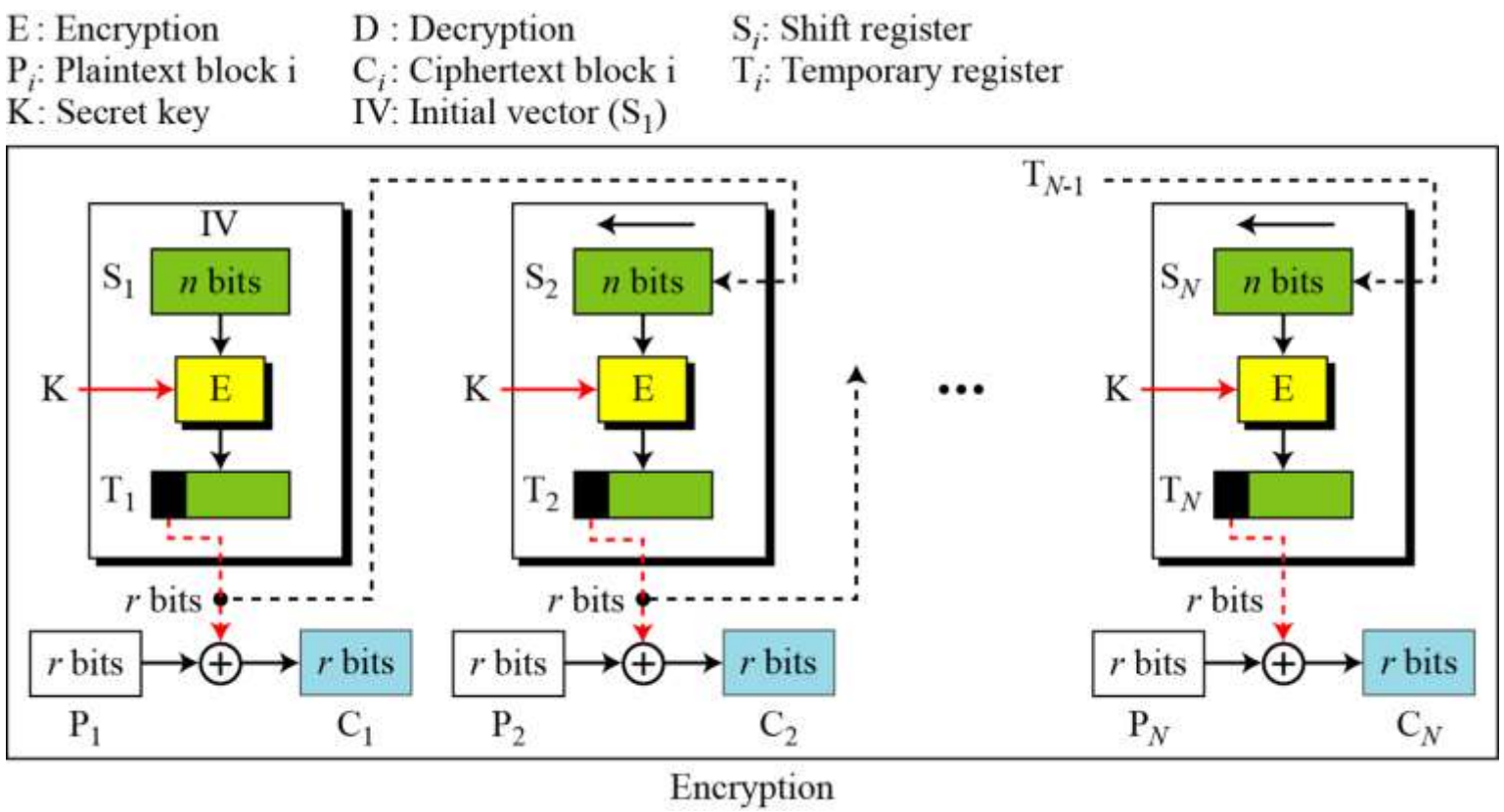

8.1.4 Continued

OFB as a Stream Cipher

Figure 8.7 *Output feedback (OFB) mode as a stream cipher*

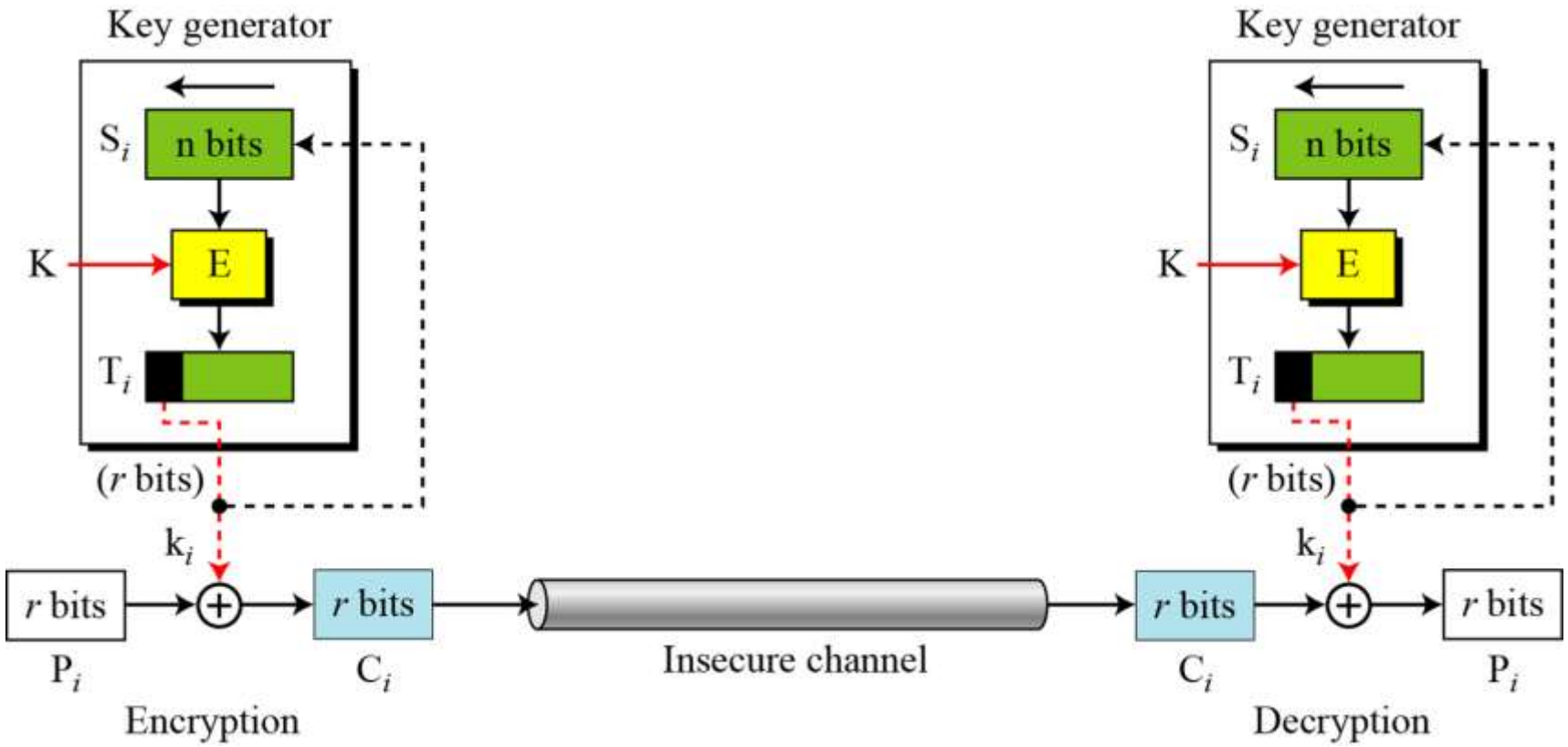

8.1.4 Continued

Algorithm 8.4 *Encryption algorithm for OFB*

```
OFB_Encryption (IV, K, r)
{
    i ← 1
    while (more blocks to encrypt)
    {
        input (P_i)
        if (i = 1)   S ← IV
        else
        {
            Temp ← shiftLeft_r (S)
            S ← concatenate (Temp, k_{i-1})
        }
        T ← E_K (S)
        k_i ← selectLeft_r (T)
        C_i ← P_i ⊕ k_i
        output (C_i)
        i ← i + 1
    }
}
```

8.1.5 Counter (CTR) Mode

In the counter (CTR) mode, there is no feedback. The pseudorandomness in the key stream is achieved using a counter.

Figure 8.8 *Encryption in counter (CTR) mode*

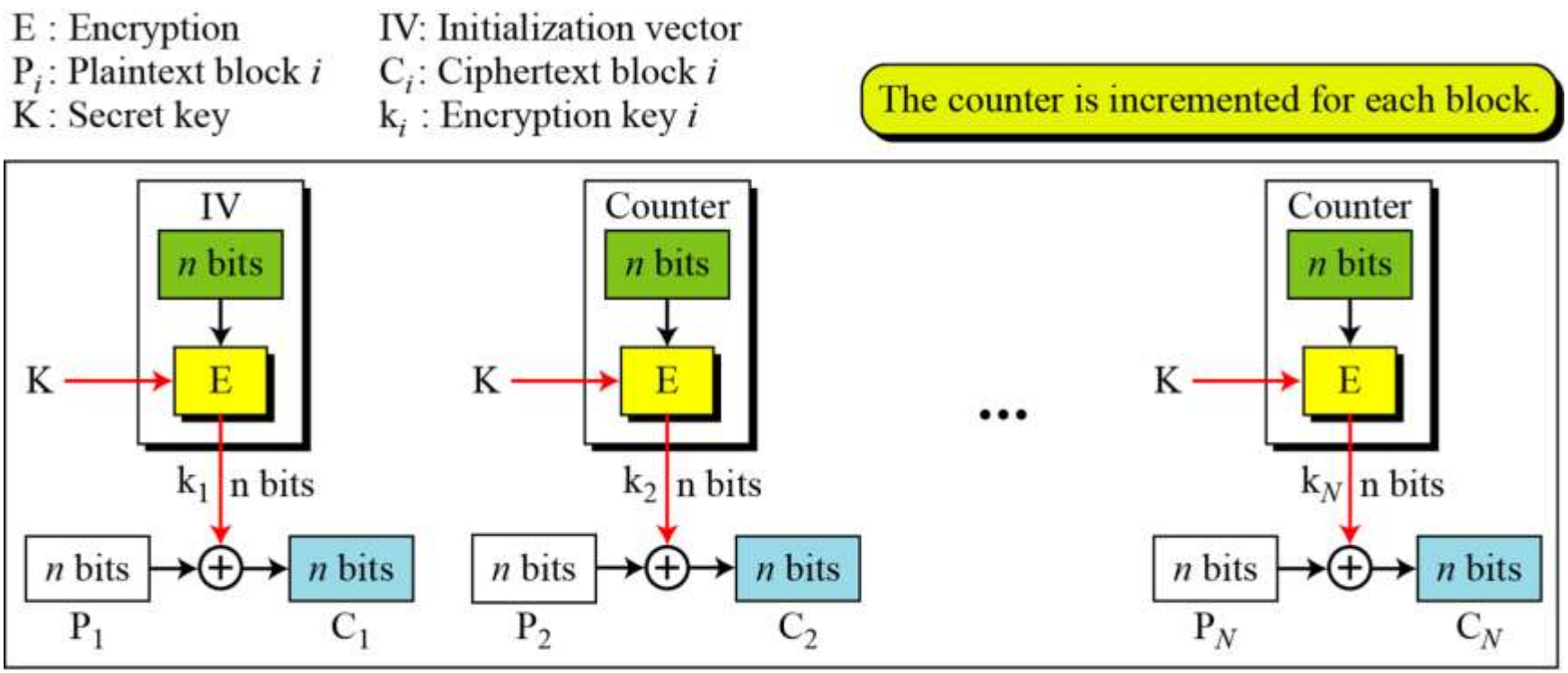

Encryption

8.1.5 Continued

Figure 8.9 *Counter (CTR) mode as a stream cipher*

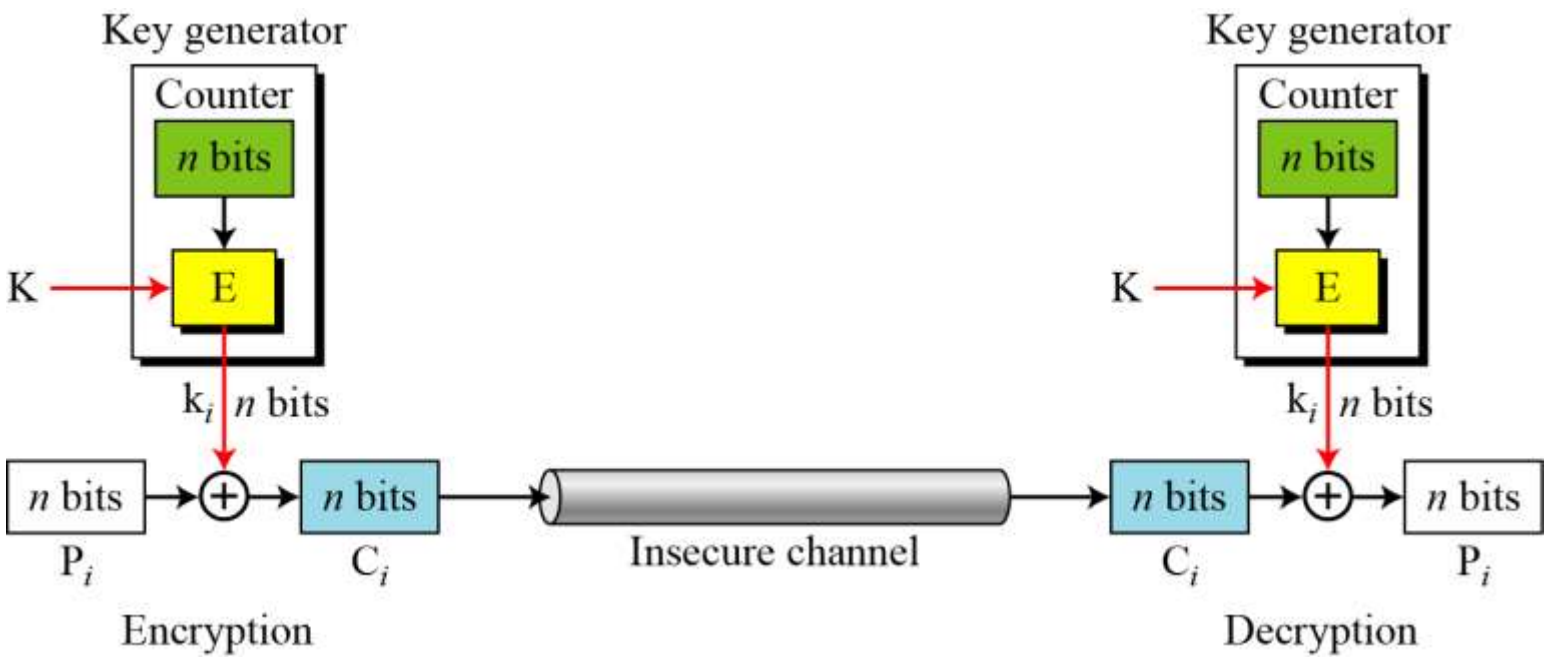

8.1.5 Continued

Algorithm 8.5 *Encryption algorithm for CTR*

```
CTR_Encryption (IV, K, Plaintext blocks)
{
    Counter ← IV
    for (i = 1 to N)
    {
        Counter ← (Counter + i − 1) mod 2^N
        k_i ← E_K (Counter)
        C_i ← P_i ⊕ k_i
    }
    return Ciphertext blocks
}
```

8.1.5 Continued

Comparison of Different Modes

Table 8.1 *Summary of operation modes*

Operation Mode	*Description*	*Type of Result*	*Data Unit Size*
ECB	Each n-bit block is encrypted independently with the same cipher key.	Block cipher	n
CBC	Same as ECB, but each block is first exclusive-ored with the previous ciphertext.	Block cipher	n
CFB	Each r-bit block is exclusive-ored with an r-bit key, which is part of previous cipher text	Stream cipher	$r \leq n$
OFB	Same as CFB, but the shift register is updated by the previous r-bit key.	Stream cipher	$r \leq n$
CTR	Same as OFB, but a counter is used instead of a shift register.	Stream cipher	n

Chapter 9

Mathematics of Cryptography

Part III: Primes and Related Congruence Equations

Copyright © The McGraw-Hill Companies, Inc. Permission required for reproduction or display.

Chapter 9

Objectives

- To introduce prime numbers and their applications in cryptography.
- To discuss some primality test algorithms and their efficiencies.
- To discuss factorization algorithms and their applications in cryptography.
- To describe the Chinese remainder theorem and its application.
- To introduce quadratic congruence.
- To introduce modular exponentiation and logarithm.

9-1 PRIMES

Asymmetric-key cryptography uses primes extensively. The topic of primes is a large part of any book on number theory. This section discusses only a few concepts and facts to pave the way for Chapter 10.

Topics discussed in this section:

9.1.1 Definition
9.1.2 Cardinality of Primes
9.1.3 Checking for Primeness
9.1.4 Euler's Phi-Function
9.1.5 Fermat's Little Theorem
9.1.6 Euler's Theorem
9.1.7 Generating Primes

9.1.1 Definition

Figure 9.1 *Three groups of positive integers*

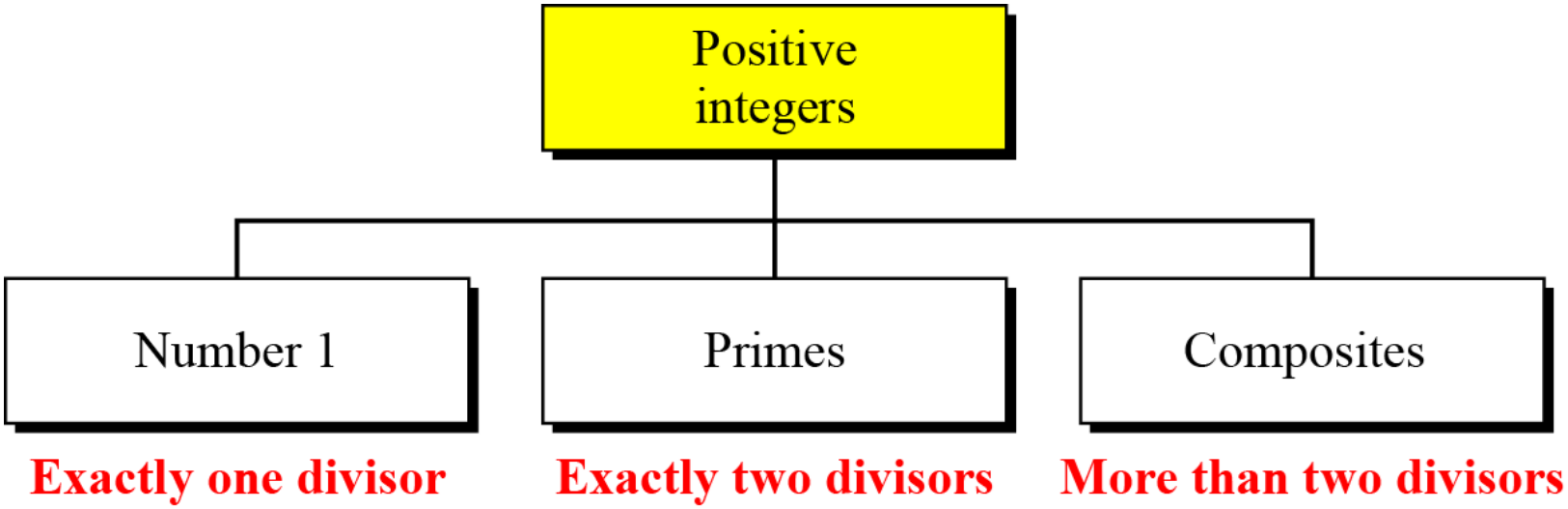

Note

A prime is divisible only by itself and 1.

9.1.1 Continued

Example 9.1

What is the smallest prime?

Solution

The smallest prime is 2, which is divisible by 2 (itself) and 1.

Example 9.2

List the primes smaller than 10.

Solution

There are four primes less than 10: 2, 3, 5, and 7. It is interesting to note that the percentage of primes in the range 1 to 10 is 40%. The percentage decreases as the range increases.

9.1.2 Cardinality of Primes

Infinite Number of Primes

Note

There is an infinite number of primes.

Number of Primes

$$[n / (\ln n)] < \pi(n) < [n/(\ln n - 1.08366)]$$

9.1.2 Continued

Example 9.3

As a trivial example, assume that the only primes are in the set {2, 3, 5, 7, 11, 13, 17}. Here P = 510510 and P + 1 = 510511. However, 510511 = 19 × 97 × 277; none of these primes were in the original list. Therefore, there are three primes greater than 17.

Example 9.4

Find the number of primes less than 1,000,000.

Solution

The approximation gives the range 72,383 to 78,543. The actual number of primes is 78,498.

9.1.3 Checking for Primeness

Given a number n, how can we determine if n is a prime? The answer is that we need to see if the number is divisible by all primes less than

$$\sqrt{n}$$

We know that this method is inefficient, but it is a good start.

9.1.3 Continued

Example 9.5

Is 97 a prime?

Solution

The floor of $\sqrt{97}$ = 9. The primes less than 9 are 2, 3, 5, and 7. We need to see if 97 is divisible by any of these numbers. It is not, so 97 is a prime.

Example 9.6

Is 301 a prime?

Solution

The floor of $\sqrt{301}$ = 17. We need to check 2, 3, 5, 7, 11, 13, and 17. The numbers 2, 3, and 5 do not divide 301, but 7 does. Therefore 301 is not a prime.

9.1.3 Continued

Sieve of Eratosthenes

Table 9.1 *Sieve of Eratosthenes*

	2	3	~~4~~	5	~~6~~	7	~~8~~	~~9~~	~~10~~
11	~~12~~	13	~~14~~	~~15~~	~~16~~	17	~~18~~	19	~~20~~
~~21~~	~~22~~	23	~~24~~	~~25~~	~~26~~	~~27~~	~~28~~	29	~~30~~
31	~~32~~	~~33~~	~~34~~	~~35~~	~~36~~	37	~~38~~	~~39~~	~~40~~
41	~~42~~	43	~~44~~	~~45~~	~~46~~	47	~~48~~	~~49~~	~~50~~
~~51~~	~~52~~	53	~~54~~	~~55~~	~~56~~	~~57~~	~~58~~	59	~~60~~
61	~~62~~	~~63~~	~~64~~	~~65~~	~~66~~	67	~~68~~	~~69~~	~~70~~
71	~~72~~	73	~~74~~	~~75~~	~~76~~	~~77~~	~~78~~	79	~~80~~
~~81~~	~~82~~	83	~~84~~	~~85~~	~~86~~	~~87~~	~~88~~	89	~~90~~
~~91~~	~~92~~	~~93~~	~~94~~	~~95~~	~~96~~	97	~~98~~	~~99~~	~~100~~

9.1.4 Euler's Phi-Function

Euler's phi-function, φ (n), which is sometimes called the Euler's totient function plays a very important role in cryptography.

1. $\phi(1) = 0$.
2. $\phi(p) = p - 1$ if p is a prime.
3. $\phi(m \times n) = \phi(m) \times \phi(n)$ if m and n are relatively prime.
4. $\phi(p^e) = p^e - p^{e-1}$ if p is a prime.

9.1.4 Continued

We can combine the above four rules to find the value of φ(n). For example, if n can be factored as

$$n = p_1^{e_1} \times p_2^{e_2} \times \ldots \times p_k^{e_k}$$

then we combine the third and the fourth rule to find

$$\phi(n) = (p_1^{e_1} - p_1^{e_1-1}) \times (p_2^{e_2} - p_2^{e_2-1}) \times \cdots \times (p_k^{e_k} - p_k^{e_k-1})$$

Note

The difficulty of finding φ(n) depends on the difficulty of finding the factorization of *n*.

9.1.4 Continued

Example 9.7

What is the value of $\varphi(13)$?

Solution

Because 13 is a prime, $\varphi(13) = (13 - 1) = 12$.

Example 9.8

What is the value of $\varphi(10)$?

Solution

We can use the third rule: $\varphi(10) = \varphi(2) \times \varphi(5) = 1 \times 4 = 4$, because 2 and 5 are primes.

9.1.4 Continued

Example 9.9

What is the value of $\varphi(240)$?

Solution

We can write $240 = 2^4 \times 3^1 \times 5^1$. Then

$$\varphi(240) = (2^4 - 2^3) \times (3^1 - 3^0) \times (5^1 - 5^0) = 64$$

Example 9.10

Can we say that $\varphi(49) = \varphi(7) \times \varphi(7) = 6 \times 6 = 36$?

Solution

No. The third rule applies when *m* and *n* are relatively prime. Here $49 = 7^2$. We need to use the fourth rule: $\varphi(49) = 7^2 - 7^1 = 42$.

9.1.4 Continued

Example 9.11

What is the number of elements in Z_{14}*?

Solution

The answer is $\varphi(14) = \varphi(7) \times \varphi(2) = 6 \times 1 = 6$. The members are 1, 3, 5, 9, 11, and 13.

Note

Interesting point: If $n > 2$, the value of $\varphi(n)$ is even.

9.1.5 Fermat's Little Theorem

First Version

$$\boxed{a^{p-1} \equiv 1 \bmod p}$$

Second Version

$$\boxed{a^{p} \equiv a \bmod p}$$

9.1.5 Continued

Example 9.12

Find the result of 6^{10} mod 11.

Solution

We have 6^{10} mod 11 = 1. This is the first version of Fermat's little theorem where p = 11.

Example 9.13

Find the result of 3^{12} mod 11.

Solution

Here the exponent (12) and the modulus (11) are not the same. With substitution this can be solved using Fermat's little theorem.

$$3^{12} \bmod 11 = (3^{11} \times 3) \bmod 11 = (3^{11} \bmod 11)\,(3 \bmod 11) = (3 \times 3) \bmod 11 = 9$$

9.1.5 Continued

Multiplicative Inverses

$$\boxed{a^{-1} \bmod p = a^{p-2} \bmod p}$$

Example 9.14

The answers to multiplicative inverses modulo a prime can be found without using the extended Euclidean algorithm:

a. $8^{-1} \bmod 17 = 8^{17-2} \bmod 17 = 8^{15} \bmod 17 = 15 \bmod 17$

b. $5^{-1} \bmod 23 = 5^{23-2} \bmod 23 = 5^{21} \bmod 23 = 14 \bmod 23$

c. $60^{-1} \bmod 101 = 60^{101-2} \bmod 101 = 60^{99} \bmod 101 = 32 \bmod 101$

d. $22^{-1} \bmod 211 = 22^{211-2} \bmod 211 = 22^{209} \bmod 211 = 48 \bmod 211$

9.1.6 Euler's Theorem

First Version

$$a^{\varphi(n)} \equiv 1 \pmod{n}$$

Second Version

$$a^{k \times \varphi(n) + 1} \equiv a \pmod{n}$$

Note

The second version of Euler's theorem is used in the RSA cryptosystem in Chapter 10.

Example 9.15

Find the result of 6^{24} mod 35.

Solution

We have $6^{24} \bmod 35 = 6^{\varphi(35)} \bmod 35 = 1$.

Example 9.16

Find the result of 20^{62} mod 77.

Solution

If we let $k = 1$ on the second version, we have

$$20^{62} \bmod 77 = (20 \bmod 77)\,(20^{\varphi(77)+1} \bmod 77) \bmod 77$$
$$= (20)(20) \bmod 77 = 15.$$

9.1.6 Continued

Multiplicative Inverses

Euler's theorem can be used to find multiplicative inverses modulo a composite.

$$\boxed{a^{-1} \bmod n = a^{\varphi(n)-1} \bmod n}$$

9.1.5 Continued

Example 9.17

The answers to multiplicative inverses modulo a composite can be found without using the extended Euclidean algorithm if we know the factorization of the composite:

a. $8^{-1} \bmod 77 = 8^{\phi(77)-1} \bmod 77 = 8^{59} \bmod 77 = 29 \bmod 77$

b. $7^{-1} \bmod 15 = 7^{\phi(15)-1} \bmod 15 = 7^{7} \bmod 15 = 13 \bmod 15$

c. $60^{-1} \bmod 187 = 60^{\phi(187)-1} \bmod 187 = 60^{159} \bmod 187 = 53 \bmod 187$

d. $71^{-1} \bmod 100 = 71^{\phi(100)-1} \bmod 100 = 71^{39} \bmod 100 = 31 \bmod 100$

9.1.7 Generating Primes

Mersenne Primes

$$\boxed{M_p = 2^p - 1}$$

$M_2 = 2^2 - 1 = 3$
$M_3 = 2^3 - 1 = 7$
$M_5 = 2^5 - 1 = 31$
$M_7 = 2^7 - 1 = 127$
$M_{11} = 2^{11} - 1 = 2047$ **Not a prime ($2047 = 23 \times 89$)**
$M_{13} = 2^{13} - 1 = 8191$
$M_{17} = 2^{17} - 1 = 131071$

Note

A number in the form $M_p = 2^p - 1$ is called a Mersenne number and may or may not be a prime.

9.1.7 Continued

Fermat Primes

$$\boxed{F_n = 2^{2^n} + 1}$$

$F_0 = 3 \quad F_1 = 5 \quad F_2 = 17 \quad F_3 = 257 \quad F_4 = 65537$

$F_5 = 4294967297 = 641 \times 6700417$ *Not a prime*

9-2 PRIMALITY TESTING

Finding an algorithm to correctly and efficiently test a very large integer and output a prime or a composite has always been a challenge in number theory, and consequently in cryptography. However, recent developments look very promising.

Topics discussed in this section:

9.2.1 Deterministic Algorithms
9.2.2 Probabilistic Algorithms
9.2.3 Recommended Primality Test

9.2.1 Deterministic Algorithms

Divisibility Algorithm

Algorithm 9.1 *Pseudocode for the divisibility test*

```
Divisibility_Test (n)                    // n is the number to test for primality
{
  r ← 2
  while (r < √n )
  {
   if (r | n) return "a composite"
   r ← r + 1
  }
  return "a prime"
}
```

Note

The bit-operation complexity of the divisibility test is exponential.

9.2.1 Continued

Example 9.18

Assume *n* has 200 bits. What is the number of bit operations needed to run the divisibility-test algorithm?

Solution

The bit-operation complexity of this algorithm is $2^{n_b/2}$. This means that the algorithm needs 2^{100} bit operations. On a computer capable of doing 2^{30} bit operations per second, the algorithm needs 2^{70} seconds to do the testing (forever).

9.2.1 Continued

AKS Algorithm

$$O((\log_2 n_b)^{12})$$

Example 9.19

Assume *n* has 200 bits. What is the number of bit operations needed to run the AKS algorithm?

Solution

This algorithm needs only $(\log_2 200)^{12}$ = 39,547,615,483 bit operations. On a computer capable of doing 1 billion bit operations per second, the algorithm needs only 40 seconds.

9.2.2 Probabilistic Algorithms

Fermat Test

If n is a prime, then $a^{n-1} \equiv 1 \bmod n$.

If n is a prime, $a^{n-1} \equiv 1 \bmod n$
If n is a composite, it is possible that $a^{n-1} \equiv 1 \bmod n$

Example 9.20

Does the number 561 pass the Fermat test?

Solution

Use base 2

The number passes the Fermat test, but it is not a prime, because 561 = 33 × 17.

9.2.2 Continued

Example 9.20

Does the number 561 pass the Fermat test?

Solution

Use base 2

$$2^{561-1} = 1 \bmod 561$$

The number passes the Fermat test, but it is not a prime, because 561 = 33 × 17.

Square Root Test

If n is a prime, $\sqrt{1} \bmod n = \pm 1$.
If n is a composite, $\sqrt{1} \bmod n = \pm 1$ and possibly other values.

Example 9.21

What are the square roots of 1 mod *n* if *n* is 7 (a prime)?

Solution

The only square roots are 1 and −1. We can see that

$$1^2 = 1 \bmod 7 \qquad (-1)^2 = 1 \bmod 7$$
$$2^2 = 4 \bmod 7 \qquad (-2)^2 = 4 \bmod 7$$
$$3^2 = 2 \bmod 7 \qquad (-3)^2 = 2 \bmod 7$$

Example 9.21

What are the square roots of 1 mod *n* if *n* is 7 (a prime)?

Solution

The only square roots are 1 and −1. We can see that

$$1^2 = 1 \bmod 7 \qquad (-1)^2 = 1 \bmod 7$$
$$2^2 = 4 \bmod 7 \qquad (-2)^2 = 4 \bmod 7$$
$$3^2 = 2 \bmod 7 \qquad (-3)^2 = 2 \bmod 7$$

Note that we don't have to test 4, 5 and 6 because 4 = –3 mod 7, 5 = –2 mod 7 and 6 = –1 mod 7.

9.2.2 Continued

Example 9.22

What are the square roots of 1 mod *n* if *n* is 8 (a composite)?

Solution

There are four solutions: 1, 3, 5, and 7 (which is −1). We can see that

$$1^2 = 1 \bmod 8 \qquad (-1)^2 = 1 \bmod 8$$
$$3^2 = 1 \bmod 8 \qquad 5^2 = 1 \bmod 8$$

9.2.2 Continued

Example 9.23

What are the square roots of 1 mod *n* if *n* is 17 (a prime)?

Solution

There are only two solutions: 1 and −1

$1^2 = 1 \bmod 17$	$(-1)^2 = 1 \bmod 17$
$2^2 = 4 \bmod 17$	$(-2)^2 = 4 \bmod 17$
$3^2 = 9 \bmod 17$	$(-3)^2 = 9 \bmod 17$
$4^2 = 16 \bmod 17$	$(-4)^2 = 16 \bmod 17$
$5^2 = 8 \bmod 17$	$(-5)^2 = 8 \bmod 17$
$6^2 = 2 \bmod 17$	$(-6)^2 = 2 \bmod 17$
$(7)^2 = 15 \bmod 17$	$(-7)^2 = 15 \bmod 17$
$(8)^2 = 13 \bmod 17$	$(-8)^2 = 13 \bmod 17$

9.2.2 Continued

Example 9.24

What are the square roots of 1 mod *n* if *n* is 22 (a composite)?

Solution

Surprisingly, there are only two solutions, +1 and −1, although 22 is a composite.

$$1^2 = 1 \bmod 22$$
$$(-1)^2 = 1 \bmod 22$$

9.2.2 Continued

Miller-Rabin Test

$$n - 1 = m \times 2^k$$

Figure 9.2 *Idea behind Fermat primality test*

$$a^{n-1} = a^{m \times 2^k} = [a^m]^{2^k} = [a^m]^{2^{2^{\cdot^{\cdot^{\cdot^{2}}}}}} \quad k \text{ times}$$

Note

The Miller-Rabin test needs from step 0 to step $k - 1$.

9.2.2 Continued

Algorithm 9.2 *Pseudocode for Miller-Rabin test*

```
Miller_Rabin_Test (n, a)                    // n is the number; a is the base.
{
    Find m and k such that n − 1 = m × 2^k
    T ← a^m mod n
    if (T = ± 1)  return "a prime"
    for (i ← 1 to k − 1)                    // k − 1 is the maximum number of steps.
    {
        T ← T^2 mod n
        if (T = +1) return "a composite"
        if (T = −1) return "a prime"
    }
    return "a composite"
}
```

9.2.2 Continued

Example 9.25

Does the number 561 pass the Miller-Rabin test?

Solution

Using base 2, let $561 - 1 = 35 \times 2^4$, which means $m = 35$, $k = 4$, and $a = 2$.

Initialization:	$T = 2^{35} \bmod 561 = 263 \bmod 561$	
$k = 1$:	$T = 263^2 \bmod 561 = 166 \bmod 561$	
$k = 2$:	$T = 166^2 \bmod 561 = 67 \bmod 561$	
$k = 3$:	$T = 67^2 \bmod 561 = +1 \bmod 561$	$\rightarrow$ **a composite**

Example 9.26

We already know that 27 is not a prime. Let us apply the Miller-Rabin test.

Solution

With base 2, let $27 - 1 = 13 \times 2^1$, which means that $m = 13$, $k = 1$, and $a = 2$. In this case, because $k - 1 = 0$, we should do only the initialization step: $T = 2^{13} \bmod 27 = 11 \bmod 27$. However, because the algorithm never enters the loop, it returns a composite.

9.2.2 Continued

Example 9.27

We know that 61 is a prime, let us see if it passes the Miller-Rabin test.

Solution

We use base 2.

$61 - 1 = 15 \times 2^2 \rightarrow m = 15 \quad k = 2 \quad a = 2$

Initialization: $T = 2^{15} \bmod 61 = 11 \bmod 61$

$k = 1 \qquad T = 11^2 \bmod 61 = -1 \bmod 61 \rightarrow$ **a prime**

9.2.3 Recommended Primality Test

Today, one of the most popular primality test is a combination of the divisibility test and the Miller-Rabin test.

9.2.3 Continued

Example 9.28

The number 4033 is a composite (37 × 109). Does it pass the recommended primality test?

Solution

1. **Perform the divisibility tests first. The numbers 2, 3, 5, 7, 11, 17, and 23 are not divisors of 4033.**
2. **Perform the Miller-Rabin test with a base of 2, 4033 − 1 = 63 × 26, which means *m* is 63 and *k* is 6.**

Initialization: $T \equiv 2^{63} \pmod{4033} \equiv 3521 \pmod{4033}$

$k = 1$ $\quad T \equiv T^2 \equiv 3521^2 \pmod{4033} \equiv -1 \pmod{4033}$ $\rightarrow$ **Passes**

Example 9.28 **Continued**

3. But we are not satisfied. We continue with another base, 3.

Initialization: $T \equiv 3^{63} \pmod{4033} \equiv 3551 \pmod{4033}$

$k = 1$ $\quad T \equiv T^2 \equiv 3551^2 \pmod{4033} \equiv 2443 \pmod{4033}$

$k = 2$ $\quad T \equiv T^2 \equiv 2443^2 \pmod{4033} \equiv 3442 \pmod{4033}$

$k = 3$ $\quad T \equiv T^2 \equiv 3442^2 \pmod{4033} \equiv 2443 \pmod{4033}$

$k = 4$ $\quad T \equiv T^2 \equiv 2443^2 \pmod{4033} \equiv 3442 \pmod{4033}$

$k = 5$ $\quad T \equiv T^2 \equiv 3442^2 \pmod{4033} \equiv 2443 \pmod{4033}$ $\rightarrow$ **Failed (composite)**

9-4 CHINESE REMAINDER THEOREM

The Chinese remainder theorem (CRT) is used to solve a set of congruent equations with one variable but different moduli, which are relatively prime, as shown below:

$$x \equiv a_1 \pmod{m_1}$$
$$x \equiv a_2 \pmod{m_2}$$
$$\cdots$$
$$x \equiv a_k \pmod{m_k}$$

9-4 Continued

Example 9.35

The following is an example of a set of equations with different moduli:

$$x \equiv 2 \pmod 3$$
$$x \equiv 3 \pmod 5$$
$$x \equiv 2 \pmod 7$$

The solution to this set of equations is given in the next section; for the moment, note that the answer to this set of equations is x = 23. This value satisfies all equations: 23 ≡ 2 (mod 3), 23 ≡ 3 (mod 5), and 23 ≡ 2 (mod 7).

9-4 Continued

Solution To Chinese Remainder Theorem

1. Find $M = m_1 \times m_2 \times \ldots \times m_k$. This is the common modulus.
2. Find $M_1 = M/m_1$, $M_2 = M/m_2$, …, $M_k = M/m_k$.
3. Find the multiplicative inverse of M_1, M_2, …, M_k using the corresponding moduli (m_1, m_2, …, m_k). Call the inverses M_1^{-1}, M_2^{-1}, …, M_k^{-1}.
4. The solution to the simultaneous equations is

$$x = (a_1 \times M_1 \times M_1^{-1} + a_2 \times M_2 \times M_2^{-1} + \cdots + a_k \times M_k \times M_k^{-1}) \bmod M$$

9-4 Continued

Example 9.36

Find the solution to the simultaneous equations:

$$x \equiv 2 \pmod 3$$
$$x \equiv 3 \pmod 5$$
$$x \equiv 2 \pmod 7$$

Solution

We follow the four steps.

1. $M = 3 \times 5 \times 7 = 105$

2. $M_1 = 105 / 3 = 35$, $M_2 = 105 / 5 = 21$, $M_3 = 105 / 7 = 15$

3. The inverses are $M_1^{-1} = 2$, $M_2^{-1} = 1$, $M_3^{-1} = 1$

4. $x = (2 \times 35 \times 2 + 3 \times 21 \times 1 + 2 \times 15 \times 1) \bmod 105 = 23 \bmod 105$

9-4 Continued

Example 9.37

Find an integer that has a remainder of 3 when divided by 7 and 13, but is divisible by 12.

Solution

This is a CRT problem. We can form three equations and solve them to find the value of x.

$$x = 3 \bmod 7$$
$$x = 3 \bmod 13$$
$$x = 0 \bmod 12$$

If we follow the four steps, we find x = 276. We can check that 276 = 3 mod 7, 276 = 3 mod 13 and 276 is divisible by 12 (the quotient is 23 and the remainder is zero).

9-4 Continued

Example 9.38

Assume we need to calculate $z = x + y$ where $x = 123$ and $y = 334$, but our system accepts only numbers less than 100. These numbers can be represented as follows:

$$x \equiv 24 \pmod{99} \qquad y \equiv 37 \pmod{99}$$
$$x \equiv 25 \pmod{98} \qquad y \equiv 40 \pmod{98}$$
$$x \equiv 26 \pmod{97} \qquad y \equiv 43 \pmod{97}$$

Adding each congruence in x with the corresponding congruence in y gives

$$x + y \equiv 61 \pmod{99} \quad \rightarrow \quad z \equiv 61 \pmod{99}$$
$$x + y \equiv 65 \pmod{98} \quad \rightarrow \quad z \equiv 65 \pmod{98}$$
$$x + y \equiv 69 \pmod{97} \quad \rightarrow \quad z \equiv 69 \pmod{97}$$

Now three equations can be solved using the Chinese remainder theorem to find z. One of the acceptable answers is $z = 457$.

9-5 QUADRATIC CONGRUENCE

In cryptography, we also need to discuss quadratic congruence—that is, equations of the form $a_2x^2 + a_1x + a_0 \equiv 0 \pmod{n}$. We limit our discussion to quadratic equations in which $a_2 = 1$ and $a_1 = 0$, that is equations of the form

$$\boxed{x^2 \equiv a \pmod{n}.}$$

Topics discussed in this section:

9.5.1 Quadratic Congruence Modulo a Prime

9.5.2 Quadratic Congruence Modulo a Composite

9.5.1 Quadratic Congruence Modulo a Prime

We first consider the case in which the modulus is a prime.

Example 9.39

The equation $x^2 \equiv 3 \pmod{11}$ has two solutions, $x \equiv 5 \pmod{11}$ and $x \equiv -5 \pmod{11}$. But note that $-5 \equiv 6 \pmod{11}$, so the solutions are actually 5 and 6. Also note that these two solutions are incongruent.

Example 9.40

The equation $x^2 \equiv 2 \pmod{11}$ has no solution. No integer x can be found such that its square is 2 mod 11.

9.5.1 Continued

Quadratic Residues and Nonresidue

In the equation $x^2 \equiv a \pmod{p}$, a is called a quadratic residue (QR) if the equation has two solutions; a is called quadratic nonresidue (QNR) if the equation has no solutions.

Example 9.41

There are 10 elements in Z_{11}*. Exactly five of them are quadratic residues and five of them are nonresidues. In other words, Z_{11}* is divided into two separate sets, QR and QNR, as shown in Figure 9.4.

Figure 9.4 ***Division of Z_{11}* elements into QRs and QNRs***

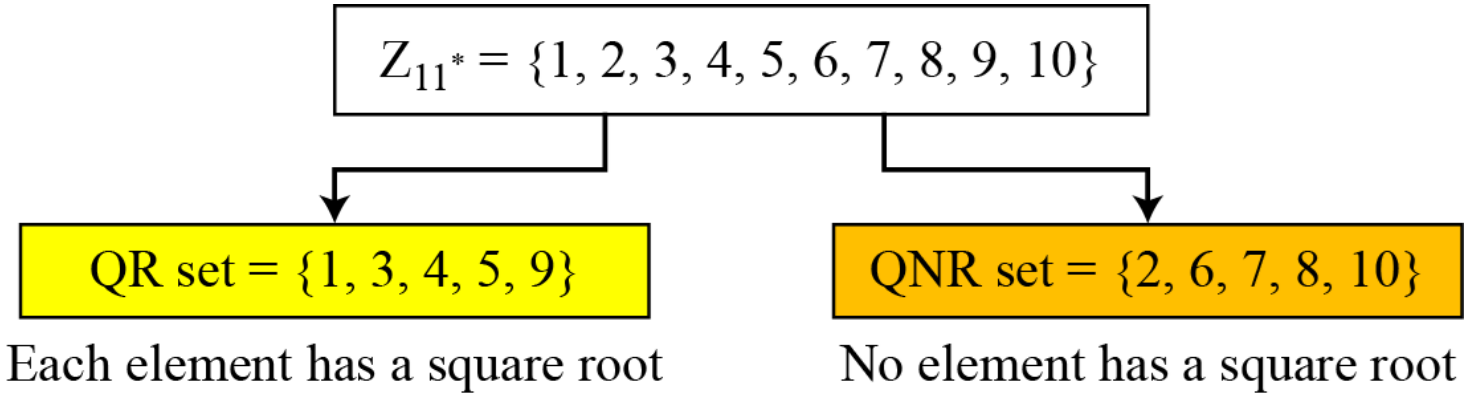

9.5.1 Continued

Euler's Criterion

a. *If $a^{(p-1)/2} \equiv 1 \pmod{p}$, a is a quadratic residue modulo p.*

b. *If $a^{(p-1)/2} \equiv -1 \pmod{p}$, a is a quadratic nonresidue modulo p.*

Example 9.42

To find out if 14 or 16 is a QR in Z_{23}*, we calculate:

$14^{(23-1)/2} \bmod 23 \rightarrow 22 \bmod 23 \rightarrow -1 \bmod 23$ **nonresidue**

$16^{(23-1)/2} \bmod 23 \rightarrow 16^{11} \bmod 23 \rightarrow 1 \bmod 23$ **residue**

9.5.1 Continued

Solving Quadratic Equation Modulo a Prime

Special Case: $p = 4k + 3$

$$x \equiv a^{(p+1)/4} \pmod{p} \qquad \text{and} \qquad x \equiv -a^{(p+1)/4} \pmod{p}$$

9.5.1 Continued

Example 9.43

Solve the following quadratic equations:

a. $x^2 \equiv 3 \pmod{23}$

b. $x^2 \equiv 2 \pmod{11}$

c. $x^2 \equiv 7 \pmod{19}$

Solutions

a. $x \equiv \pm 16 \pmod{23}$ $\sqrt{3} \equiv \pm 16 \pmod{23}$.

b. There is no solution for $\sqrt{2}$ in Z11.

c. $x \equiv \pm 11 \pmod{19}$. $\sqrt{7} \equiv \pm 11 \pmod{19}$.

9.5.2 Quadratic Congruence Modulo a Composite

Figure 9.5 ***Decomposition of congruence modulo a composite***

$$x^2 \equiv a \bmod (n)$$
$$n = p_1 \times p_2 \times \ldots \times p_k$$

$$\rightarrow$$

$$x^2 \equiv a_1 \pmod{p_1}$$
$$x^2 \equiv a_2 \pmod{p_1}$$
$$\cdots$$
$$x^2 \equiv a_k \pmod{p_k}$$

$$\rightarrow$$

$$x_1 \equiv \pm b_1 \pmod{p_1}$$
$$x_2 \equiv \pm b_2 \pmod{p_1}$$
$$\cdots$$
$$x_k \equiv \pm b_k \pmod{p_k}$$

9.5.2 Continued

Example 9.44

Assume that $x^2 \equiv 36 \pmod{77}$. We know that $77 = 7 \times 11$. We can write

$$x^2 \equiv 36 \pmod{7} \equiv 1 \pmod{7} \qquad \text{and} \qquad x^2 \equiv 36 \pmod{11} \equiv 3 \pmod{11}$$

The answers are $x \equiv +1 \pmod{7}$, $x \equiv -1 \pmod{7}$, $x \equiv +5 \pmod{11}$, and $x \equiv -5 \pmod{11}$. Now we can make four sets of equations out of these:

$$\begin{array}{ll}
\textbf{Set 1: } x \equiv +1 \pmod{7} & x \equiv +5 \pmod{11} \\
\textbf{Set 2: } x \equiv +1 \pmod{7} & x \equiv -5 \pmod{11} \\
\textbf{Set 3: } x \equiv -1 \pmod{7} & x \equiv +5 \pmod{11} \\
\textbf{Set 4: } x \equiv -1 \pmod{7} & x \equiv -5 \pmod{11}
\end{array}$$

The answers are $x = \pm 6$ and ± 27.

9.5.2 Continued

Complexity

How hard is it to solve a quadratic congruence modulo a composite? The main task is the factorization of the modulus. In other words, the complexity of solving a quadratic congruence modulo a composite is the same as factorizing a composite integer. As we have seen, if *n* is very large, factorization is infeasible.

Note

Solving a quadratic congruence modulo a composite is as hard as factorization of the modulus.