Computational Physics: Introductory Course

Assignment 9:

Monte-Carlo methods

Per Jönsson & Jörgen Ekman
Faculty of Technology and Society
Malmö University

What the report should contain

A report should contain:

- The py-files, with carefully commented Python code, that were used to solve the exercises. All code should start with a sentence or two describing what the code is doing. Each py-file should be embedded in the LaTeX or Word document.
- When applicable, you should include the output or plots produced by your code as part of the exercise.
- When you, as part of an exercise, are asked to draw physical conclusions, it is important that these conclusions are included in the report. If you are unable to draw any conclusion, you should explicitly write 'I was not able to draw any conclusion'.

Important things to keep in mind for producing a good report that adheres to the general rules in scientific writing.

- All variables in the report should be in math font, e.g., the distance was $d = 1.5$ (do not write the distance was d = 1.5, wrong).
- All units in the report should be in correct font, e.g., the acceleration is $a = 1.5$ ms^{-2} (do not write the acceleration is $a = 1.5\,ms^{-2}$, wrong).
- Write $a = 1.5 \cdot 10^{-3}$ instead of $a = 1.5 * 10^{-3}$ (wrong, never use * in equations or text)
- If you give computed values, round them to a reasonable number of decimals.
- The font size in plots should be large enough for the axis texts and legends to be read.

Reading instructions for assignment 8

Read sections 22.1 - 22.9 in the lecture notes

Exercises

1. Compute the definite integral
$$\int_0^{10} xe^{-x}dx,$$
using a Monte-Carlo method with $10^2, 10^3, \ldots, 10^7$ random numbers. Compare with the analytical result. Present your results in a table.

2. The density in g/cm^3 in the interior of the sun can be approximated by the following expression
$$\rho(x) = (2139x + 155)e^{-13.8x}\,,$$
where x is a radial coordinate, stretching from the center ($x = 0$) to the surface of the sun ($x = 1$).

   Using a Monte-Carlo method (see section 22.6 in the lecture notes), compute the mass and moment of inertia of the sun and compare your result with other sources. For the radius of the sun, use 6.96×10^8 m.

3. In assignment 6 and exercise 2, we studied Rutherford scattering in two dimensions by solving a set of coupled first order differential equations. In particular, for a given impact parameter b you could find the corresponding numerical value of the scattering angle θ. In this exercise, you will extend the code and simulate thousands of scattered alpha particles and investigate how many alpha particles that are scattered at different angles. Finally, you will compare your results with predictions from the differential cross section for Rutherford scattering. To solve the exercise, you need to consult the Physics background section below.

   Assume the same values for the parameters as in assignment 6 and exercise 2. That is, $K = 3.477 \times 10^{13}$ fm^3 fs$^{-2}e^{-2}$, $Q = 79\ e$, $q = 2\ e$ and $v = 1.53 \times 10^7$ fm/fs (m/s). The scattering angles that will be investigated are in the interval $50 - 180°$. Find the impact parameter b_{max} corresponding to 50°. Now follow the steeps below:

   (a) For each alpha particle, construct coordinates b_y and b_z of the impact parameter b by assigning them uniformly distributed random numbers between 0 and b_{max}. The impact parameter is then given as $b = \sqrt{b_y^2 + b_z^2}$.

   (b) If $b < b_{\text{max}}$, use the code obtained in assignment 6, exercise 2 to determine the numerical scattering angle. Store the scattering angle in an array.

   (c) Repeat steps (a) and (b) for at least 1 000 alpha particles and plot a histogram in the range $50° - 180°$ based on the array with the scattering angles. Choose a suitable bin number.

   (d) Compare the resulting histogram with the predicted number of scattered alpha particles in each bin. See figure 1 for expected results.

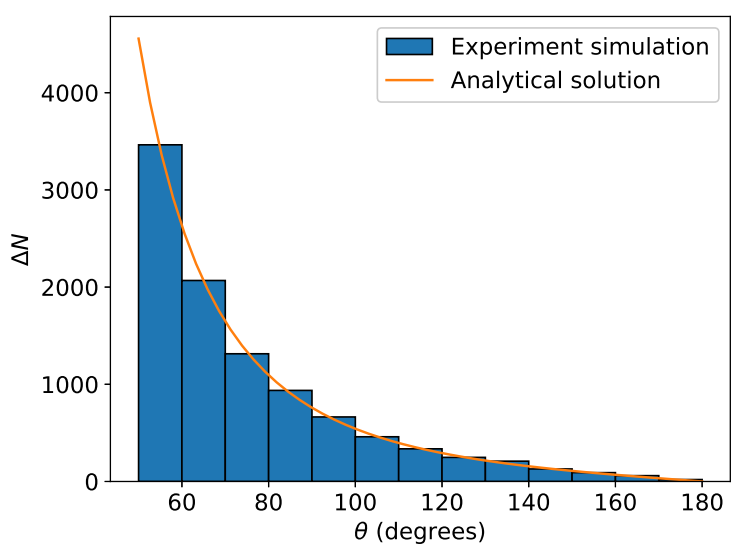

Figure 1: *Resulting histogram when simulating the Rutherford experiment with 10 000 alpha particles and* $\Delta\theta = 10°$.

Physics background

Rutherford Scattering in two dimensions

Between 1908 and 1913 Hans Geiger and Ernest Marsden, under the supervision of Ernest Rutherford (Nobel Prize in Chemistry 1908), performed a series of famous experiments proving that almost all the positive charge and almost all the mass of the atom is concentrated in a very small atomic nucleus. In the experiments, they used a beam of alpha particles and directed it towards a gold foil. The scientists discovered that the alpha particles relatively often were scattered in large angles and occasionally they scattered backwards, which would be impossible if the positive charge was spread out evenly over the volume of the atom, according to the view at the time (the plum pudding model of the atom, see `https://en.wikipedia.org/wiki/Plum_pudding_model`). By using Coulomb's law

$$F = K\frac{qQ}{r^2}\,,$$

conservation of angular momentum and assuming point charges, they derived the following relation, in good agreement with observations, between the scattering angle θ and the so called the impact parameter b (see figure 2):

$$\sin\frac{\theta}{2} = \frac{1}{\sqrt{1+\frac{v^4b^2}{(KQq)^2}}}\,,$$

where v is the initial velocity of the alpha particle, $Q = 79\ e$ and $q = 2\ e$ are the elementary charges ($1\ e = 1.602\times10^{-19}$ C) of the gold nucleus and alpha particle, respectively, and K is a constant. We can also solve for b and find

$$b = \frac{KQq}{v^2}\frac{1}{\tan(\frac{\theta}{2})}\,.$$

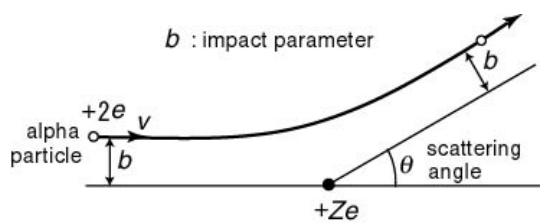

Figure 2: *Kinematics of the Rutherford experiment.*

Diffrential cross sections and the Rutherford formula

Denoting the intensity of incident particles on a target, i.e., the number of incident particles per unit area, by I, we find that the number of particles with impact parameters in the range b to $b+db$ is given by (see figure 3)

$$dN = I\cdot 2\pi b db\,.$$

Since a given impact parameter b corresponds to a certain scattering angle θ, we conclude that the same number of particles (dN) will be scattered in a solid angle $d\Omega$ given by $2\pi\sin\theta d\theta$. The relation between the area $d\sigma = 2\pi b db$ and $d\Omega$ is called the differential cross section and is given by

$$\frac{d\sigma}{d\Omega} = \frac{2\pi b db}{2\pi\sin\theta d\theta} = \frac{b}{\sin\theta}\left|\frac{db}{d\theta}\right|\,.$$

Since $\frac{d\sigma}{d\Omega}$ is an area, which cannot be negative, we have taken the absolute value of the derivative in the expression above.

To derive the differential cross section for Rutherford scattering, the so-called Rutherford formula, we make use of the derivative

$$\left|\frac{db}{d\theta}\right| = \frac{KQq}{2v^2}\frac{1}{\sin^2(\frac{\theta}{2})}\,,$$

and the relation $\sin\theta = 2\cos(\frac{\theta}{2})\sin(\frac{\theta}{2})$ to finally obtain.

$$\frac{d\sigma}{d\Omega} = \frac{K^2Q^2q^2}{4v^4}\frac{1}{\sin^4\left(\frac{\theta}{2}\right)}\,.$$

We now assume that we have positioned detectors around the gold foil to count the number of alpha particles at different angles. The number of scattered alpha particles detected at angle θ will thus be

$$\Delta N = I \cdot \frac{d\sigma}{d\Omega} \cdot 2\pi \sin\theta \Delta\theta\,,$$

where is $\Delta\theta$ is the angle covered by the detector.

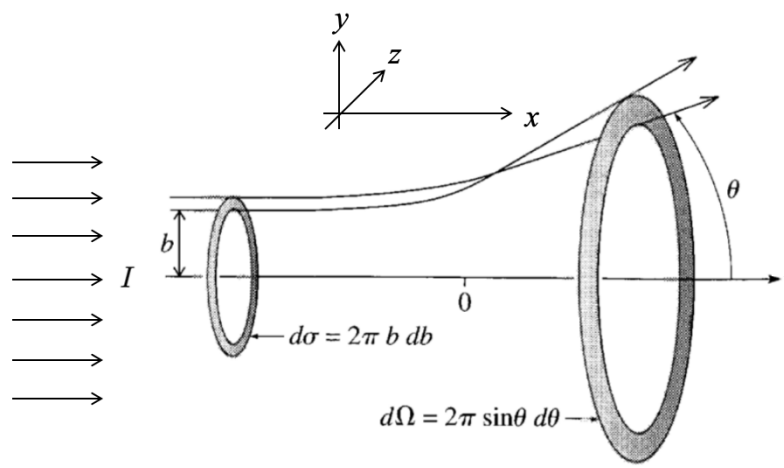

Figure 3: *Explanation of differential cross section.*