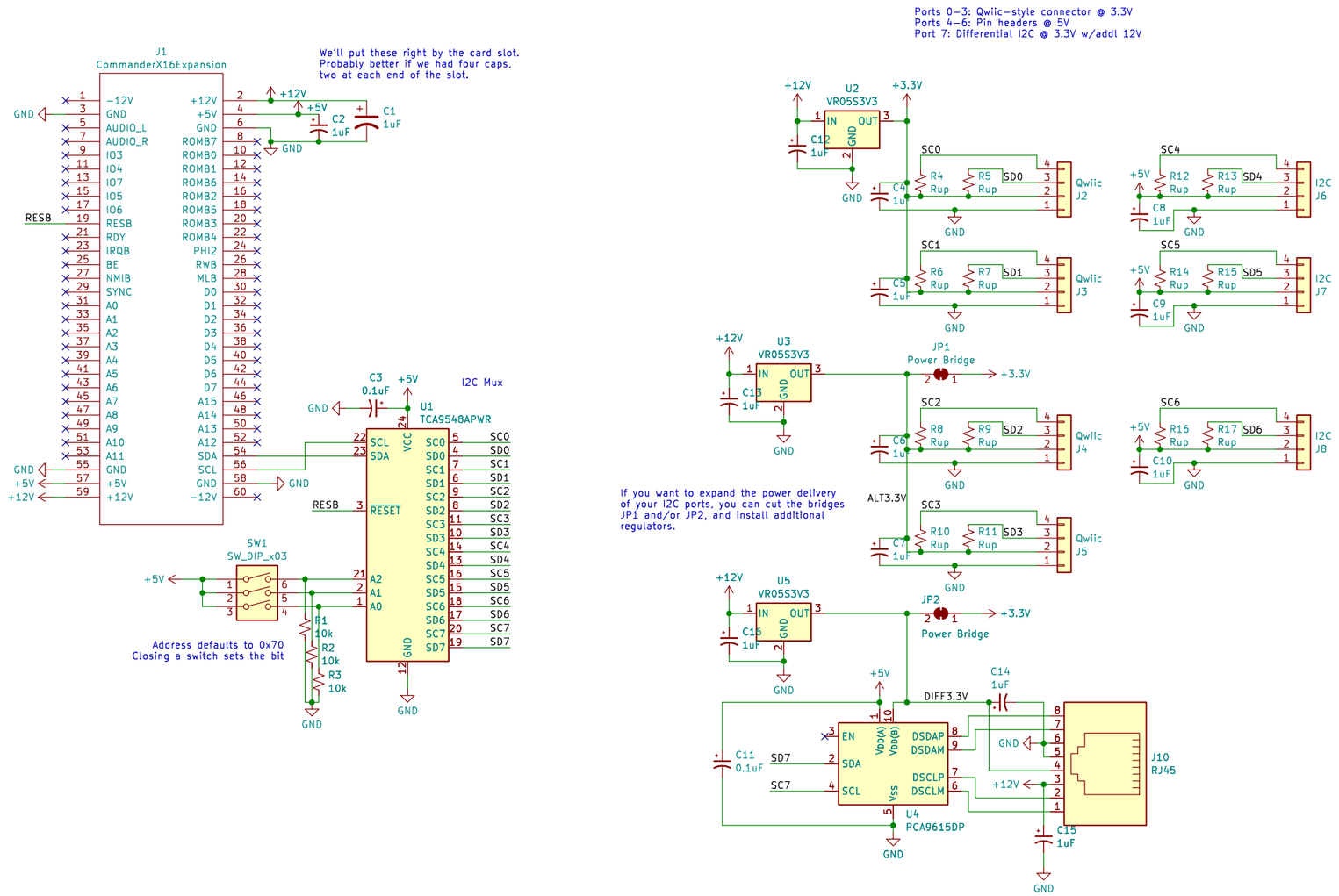


Sheet: /
File: x16-i2c.kicad_sch

**Title:**

| Size: A3 | Date: | Rev: |
|---|---|---|
| KiCad E.D.A. kicad 7.0.8 | | Id: 1/1 |