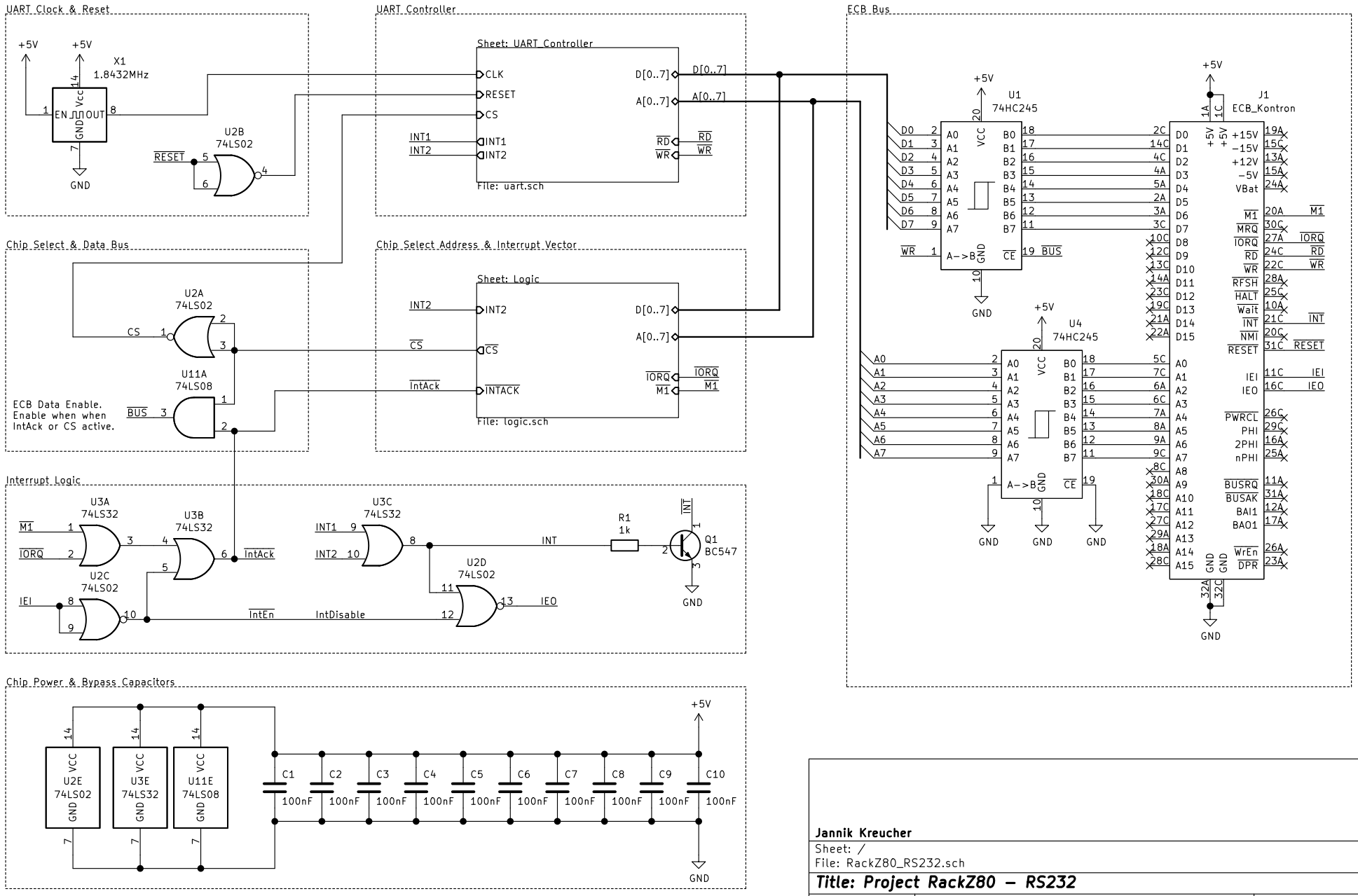

Jannik Kreucher

Sheet: /

File: RackZ80_RS232.sch

Title: Project RackZ80 – RS232

Size: A4	Date: 2021-04-09	**Rev: 1.0**
KiCad E.D.A. kicad 5.1.9-73d0e3b20d88ubuntu20.04.1		Id: 1/3

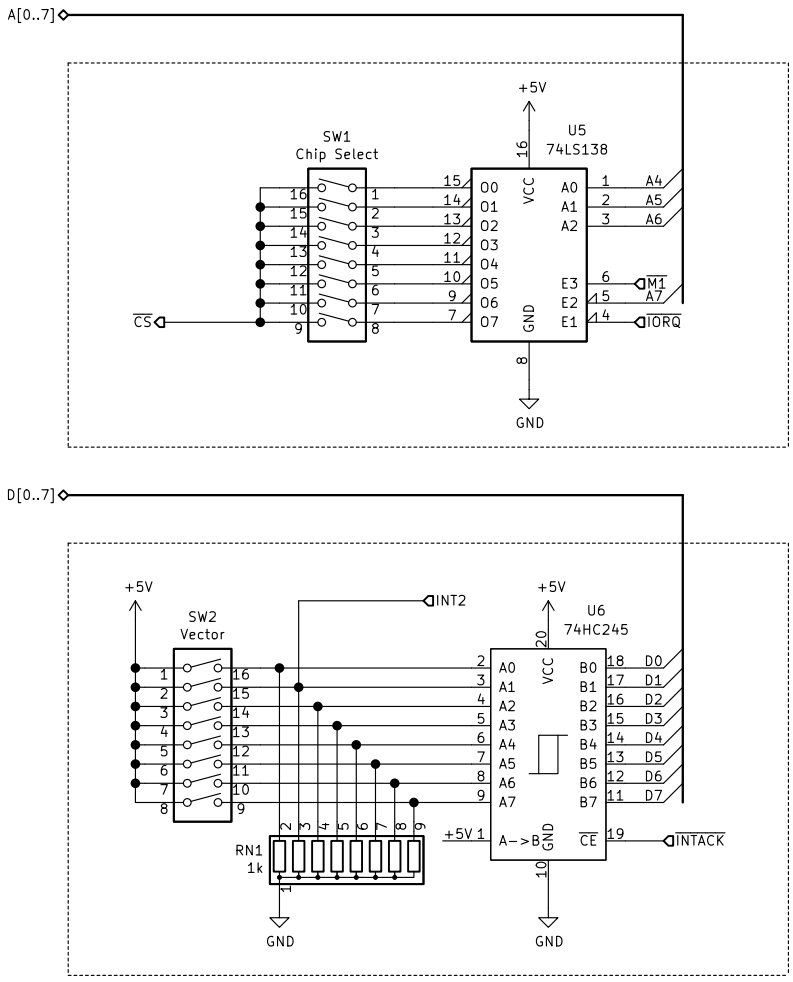

Jannik Kreucher

Sheet: /Logic/
File: logic.sch

Title: Project RackZ80 – RS232

Size: A4	Date: 2021-04-09	**Rev: 1.0**
KiCad E.D.A. kicad 5.1.9-73d0e3b20d88ubuntu20.04.1		Id: 2/3

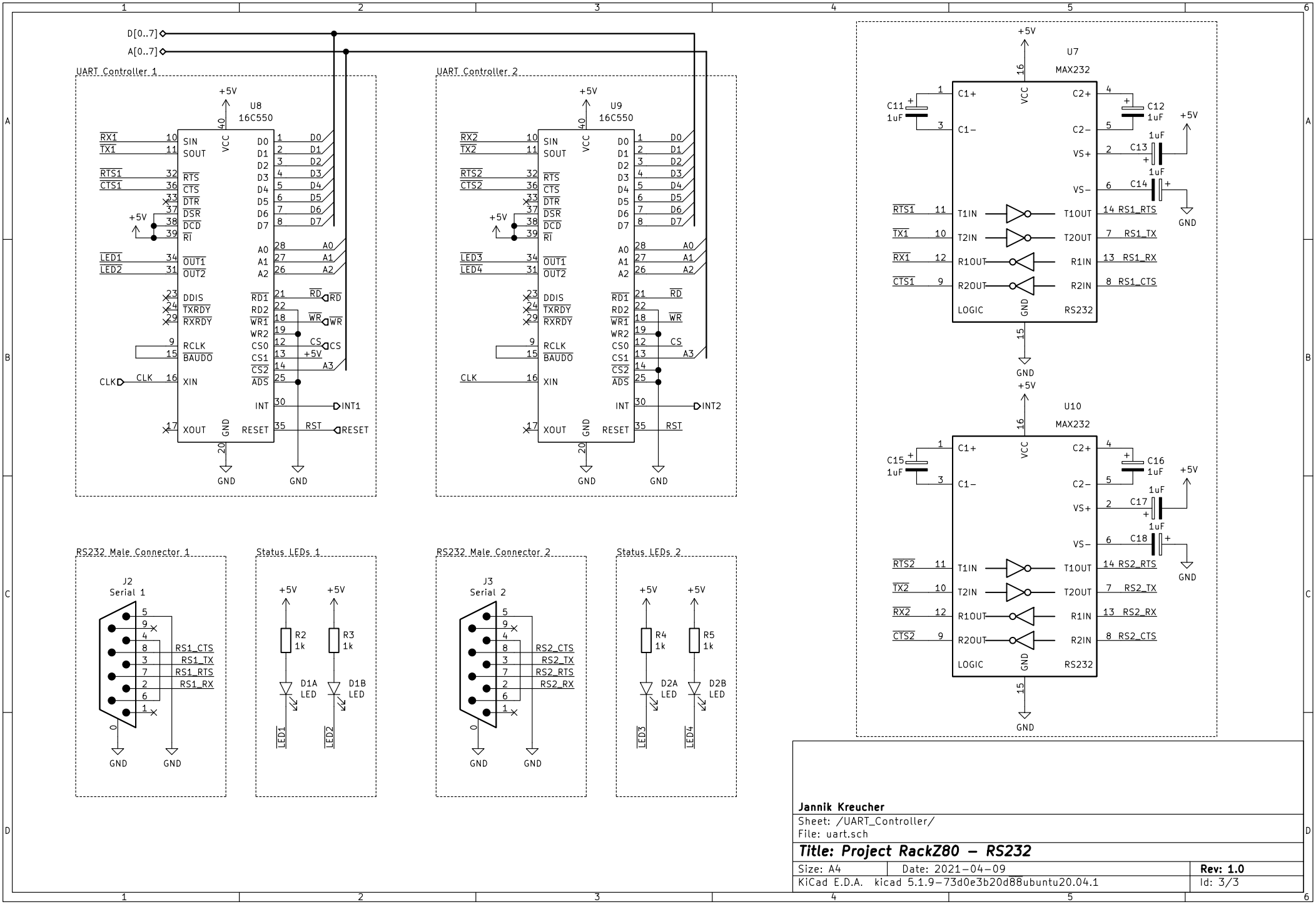

Jannik Kreucher

Sheet: /UART_Controller/

File: uart.sch

Title: Project RackZ80 – RS232

Size: A4	Date: 2021-04-09	**Rev: 1.0**
KiCad E.D.A. kicad 5.1.9-73d0e3b20d88ubuntu20.04.1		Id: 3/3