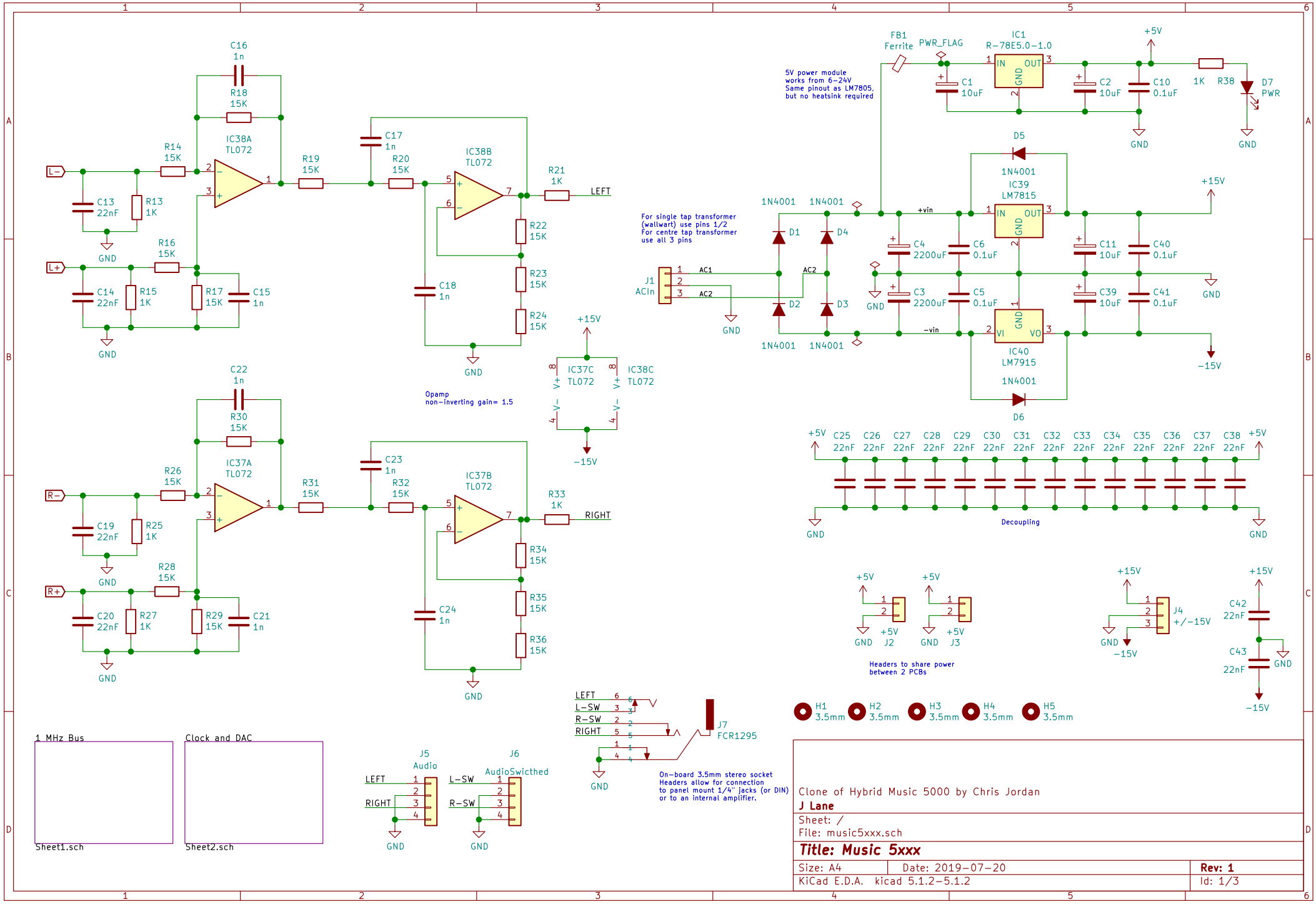
C16 1n
R18 15K
IC38A TL072
R14 15K
R19 15K
C17 1n
R20 15K
IC38B TL072
R21 1K
LEFT
L−
L+
C13 22nF
R13 1K
R16 15K
C14 22nF
R15 1K
R17 15K
C15 1n
C18 1n
R22 15K
R23 15K
R24 15K
GND
C22 1n
R30 15K
IC37A TL072
R26 15K
R31 15K
C23 1n
R32 15K
IC37B TL072
R33 1K
RIGHT
R−
R+
C19 22nF
R25 1K
R28 15K
C20 22nF
R27 1K
R29 15K
C21 1n
C24 1n
R34 15K
R35 15K
R36 15K
+15V
IC37C TL072
IC38C TL072
−15V
Opamp
non−inverting gain= 1.5
FB1 Ferrite
PWR_FLAG
IC1 R−78E5.0−1.0
5V power module
works from 6−24V
Same pinout as LM7805,
but no heatsink required
C1 10uF
C2 10uF
C10 0.1uF
+5V
1K R38
D7 PWR
D5 1N4001
IC39 LM7815
+15V
For single tap transformer
(wallwart) use pins 1/2
For centre tap transformer
use all 3 pins
J1 ACIn
AC1
AC2
1N4001
D1
D2
D3
D4
+vin
−vin
C4 2200uF
C3 2200uF
C6 0.1uF
C5 0.1uF
C11 10uF
C39 10uF
C40 0.1uF
C41 0.1uF
IC40 LM7915
−15V
D6 1N4001
C25 22nF
C26 22nF
C27 22nF
C28 22nF
C29 22nF
C30 22nF
C31 22nF
C32 22nF
C33 22nF
C34 22nF
C35 22nF
C36 22nF
C37 22nF
C38 22nF
Decoupling
J2
J3
Headers to share power
between 2 PCBs
J4 +/−15V
C42 22nF
C43 22nF
H1 3.5mm
H2 3.5mm
H3 3.5mm
H4 3.5mm
H5 3.5mm
1 MHz Bus
Sheet1.sch
Clock and DAC
Sheet2.sch
J5 Audio
J6 AudioSwicthed
L−SW
R−SW
J7 FCR1295
On−board 3.5mm stereo socket
Headers allow for connection
to panel mount 1/4" jacks (or DIN)
or to an internal amplifier.
Clone of Hybrid Music 5000 by Chris Jordan
J Lane
Sheet: /
File: music5xxx.sch
Title: Music 5xxx
Size: A4
Date: 2019−07−20
Rev: 1
KiCad E.D.A. kicad 5.1.2−5.1.2
Id: 1/3

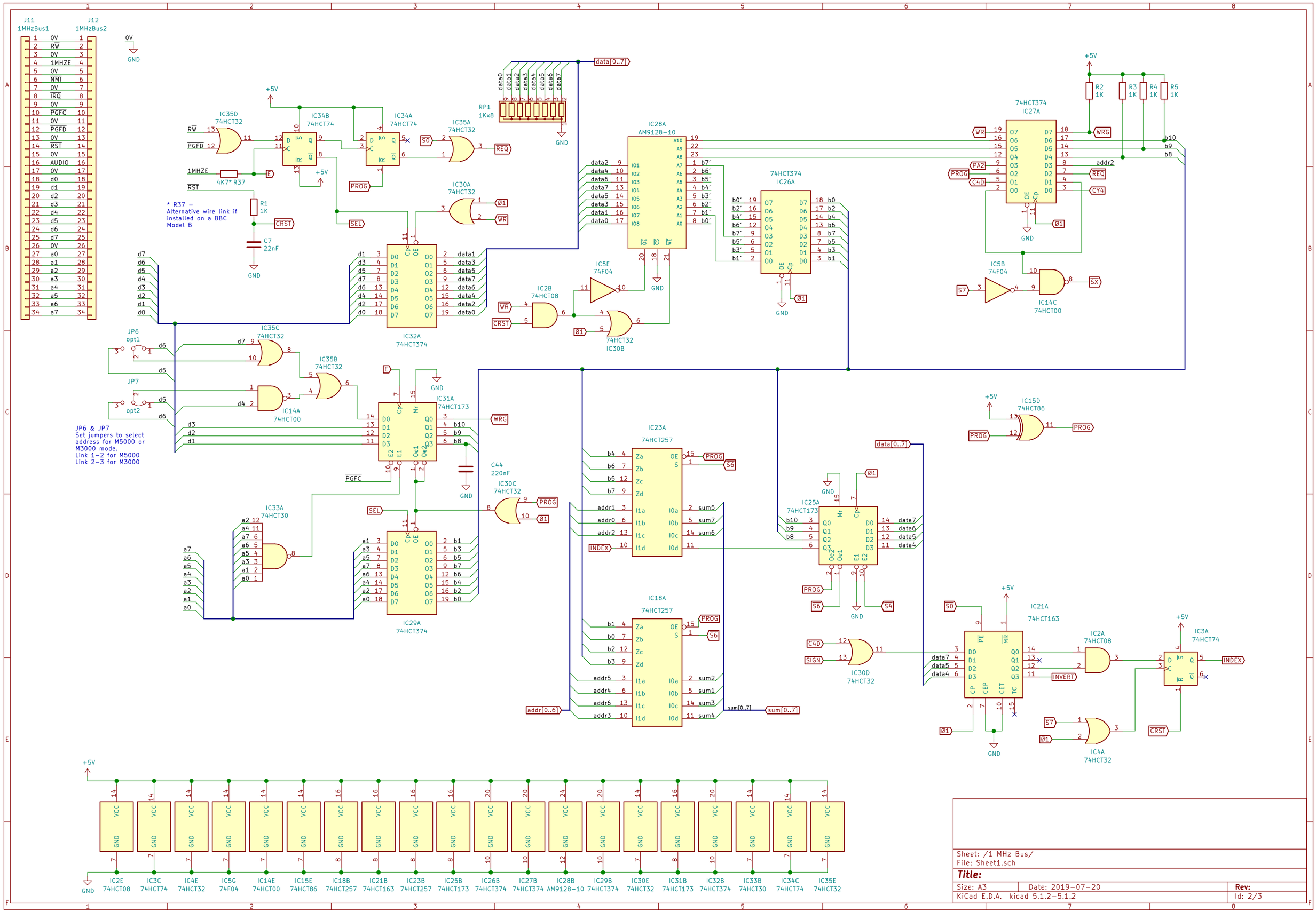
J11
1MHzBus1
J12
1MHzBus2
0V
GND
+5V
IC35D
74HCT32
IC34B
74HCT74
IC34A
74HCT74
IC35A
74HCT32
RP1
1Kx8
data[0..7]
IC28A
AM9128-10
74HCT374
IC27A
R2
1K
R3
1K
R4
1K
R5
1K
4K7* R37
R1
1K
C7
22nF
* R37 –
Alternative wire link if
installed on a BBC
Model B
IC30A
74HCT32
IC32A
74HCT374
74HCT374
IC26A
IC5E
74F04
IC2B
74HCT08
74HCT32
IC30B
IC5B
74F04
IC14C
74HCT00
JP6
opt1
JP7
opt2
IC35C
74HCT32
IC35B
74HCT32
IC14A
74HCT00
IC31A
74HCT173
JP6 & JP7
Set jumpers to select
address for M5000 or
M3000 mode.
Link 1–2 for M5000
Link 2–3 for M3000
C44
220nF
IC30C
74HCT32
IC33A
74HCT30
IC29A
74HCT374
IC23A
74HCT257
IC18A
74HCT257
IC15D
74HCT86
IC25A
74HCT173
IC21A
74HCT163
IC30D
74HCT32
IC2A
74HCT08
IC3A
74HCT74
IC4A
74HCT32
addr[0..6]
sum[0..7]
IC2E 74HCT08
IC3C 74HCT74
IC4E 74HCT32
IC5G 74F04
IC14E 74HCT00
IC15E 74HCT86
IC18B 74HCT257
IC21B 74HCT163
IC23B 74HCT257
IC25B 74HCT173
IC26B 74HCT374
IC27B 74HCT374
IC28B AM9128-10
IC29B 74HCT374
IC30E 74HCT32
IC31B 74HCT173
IC32B 74HCT374
IC33B 74HCT30
IC34C 74HCT74
IC35E 74HCT32
Sheet: /1 MHz Bus/
File: Sheet1.sch
Title:
Size: A3
Date: 2019-07-20
Rev:
KiCad E.D.A. kicad 5.1.2-5.1.2
Id: 2/3

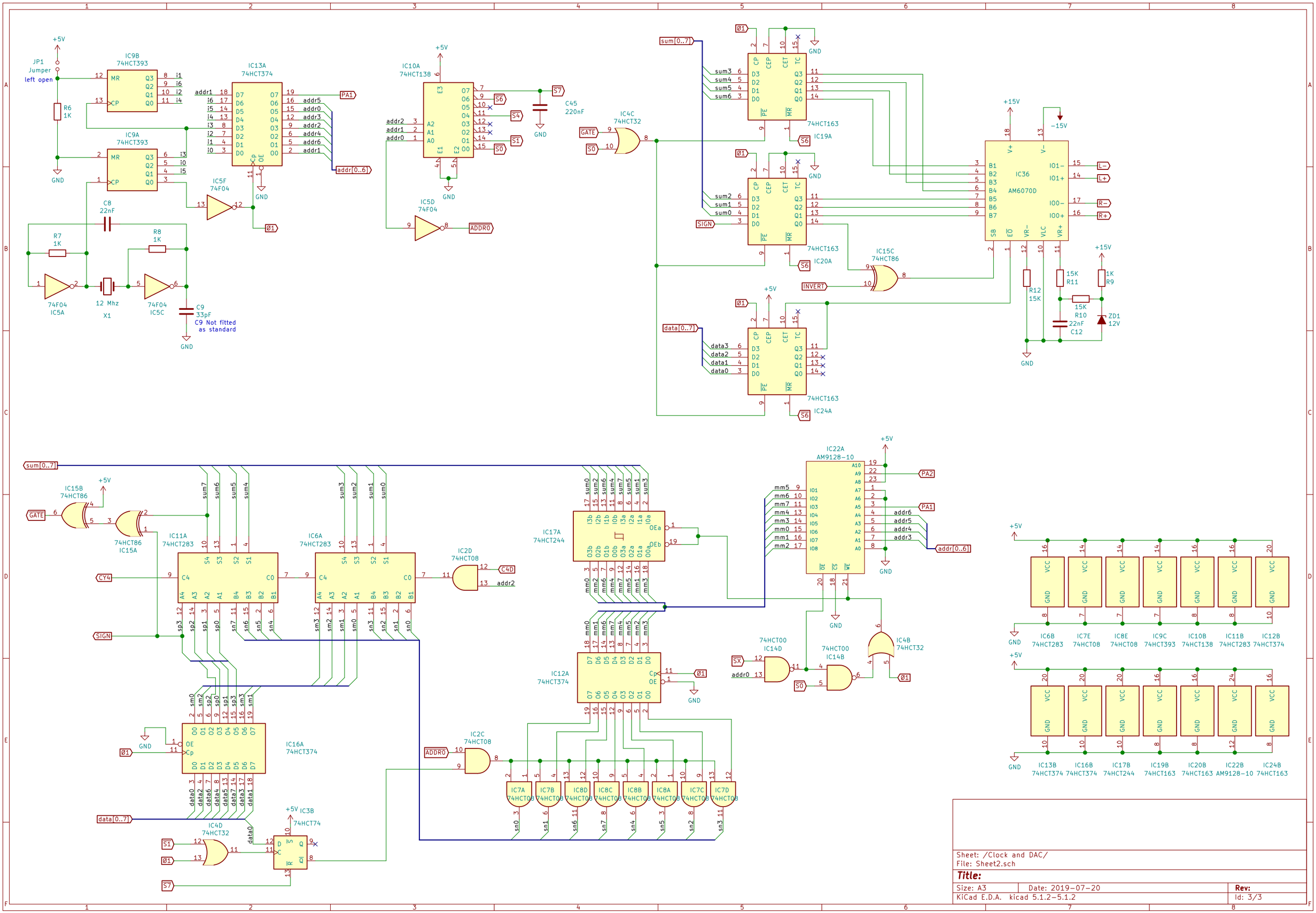

Sheet: /Clock and DAC/
File: Sheet2.sch

Title:

Size: A3	Date: 2019-07-20	Rev:
KiCad E.D.A. kicad 5.1.2-5.1.2		Id: 3/3