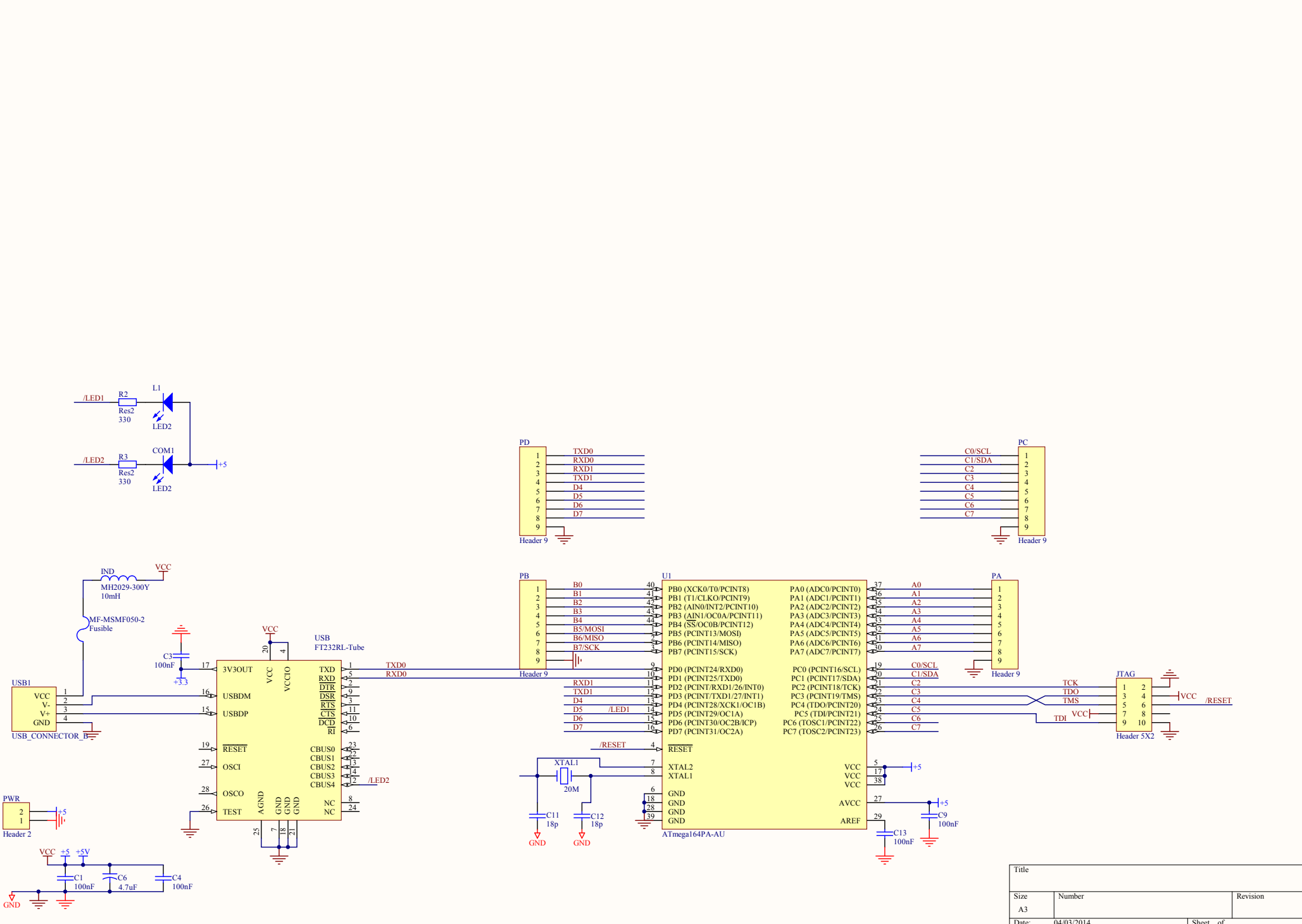
/LED1
R2
Res2
330
L1
LED2
/LED2
R3
Res2
330
COM1
LED2
+5
PD
TXD0
RXD0
RXD1
TXD1
D4
D5
D6
D7
Header 9
PC
C0/SCL
C1/SDA
C2
C3
C4
C5
C6
C7
Header 9
IND
MH2029-300Y
10mH
VCC
MF-MSMF050-2
Fusible
C3
100nF
+3.3
USB1
VCC
V-
V+
GND
USB_CONNECTOR_B
USB
FT232RL-Tube
3V3OUT
USBDM
USBDP
RESET
OSCI
OSCO
TEST
VCC
VCCIO
AGND
GND
GND
GND
TXD
RXD
DTR
DSR
RTS
CTS
DCD
RI
CBUS0
CBUS1
CBUS2
CBUS3
CBUS4
NC
NC
/LED2
TXD0
RXD0
PB
B0
B1
B2
B3
B4
B5/MOSI
B6/MISO
B7/SCK
RXD1
TXD1
D4
D5
/LED1
D6
D7
Header 9
U1
PB0 (XCK0/T0/PCINT8)
PB1 (T1/CLKO/PCINT9)
PB2 (AIN0/INT2/PCINT10)
PB3 (AIN1/OC0A/PCINT11)
PB4 (SS/OC0B/PCINT12)
PB5 (PCINT13/MOSI)
PB6 (PCINT14/MISO)
PB7 (PCINT15/SCK)
PD0 (PCINT24/RXD0)
PD1 (PCINT25/TXD0)
PD2 (PCINT/RXD1/26/INT0)
PD3 (PCINT/TXD1/27/INT1)
PD4 (PCINT28/XCK1/OC1B)
PD5 (PCINT29/OC1A)
PD6 (PCINT30/OC2B/ICP)
PD7 (PCINT31/OC2A)
RESET
XTAL2
XTAL1
GND
GND
GND
GND
PA0 (ADC0/PCINT0)
PA1 (ADC1/PCINT1)
PA2 (ADC2/PCINT2)
PA3 (ADC3/PCINT3)
PA4 (ADC4/PCINT4)
PA5 (ADC5/PCINT5)
PA6 (ADC6/PCINT6)
PA7 (ADC7/PCINT7)
PC0 (PCINT16/SCL)
PC1 (PCINT17/SDA)
PC2 (PCINT18/TCK)
PC3 (PCINT19/TMS)
PC4 (TDO/PCINT20)
PC5 (TDI/PCINT21)
PC6 (TOSC1/PCINT22)
PC7 (TOSC2/PCINT23)
VCC
VCC
VCC
AVCC
AREF
ATmega164PA-AU
/RESET
XTAL1
20M
C11
18p
C12
18p
GND
GND
+5
+5
C9
100nF
C13
100nF
PA
A0
A1
A2
A3
A4
A5
A6
A7
Header 9
JTAG
TCK
TDO
TMS
TDI
VCC
/RESET
Header 5X2
PWR
Header 2
+5
VCC
+5
+5V
C1
100nF
C6
4.7uF
C4
100nF
GND
Title
Size
A3
Number
Revision
Date:
04/03/2014
Sheet of
File:
E:\Dropbox\..\Esquema.Sch
Drawn By:

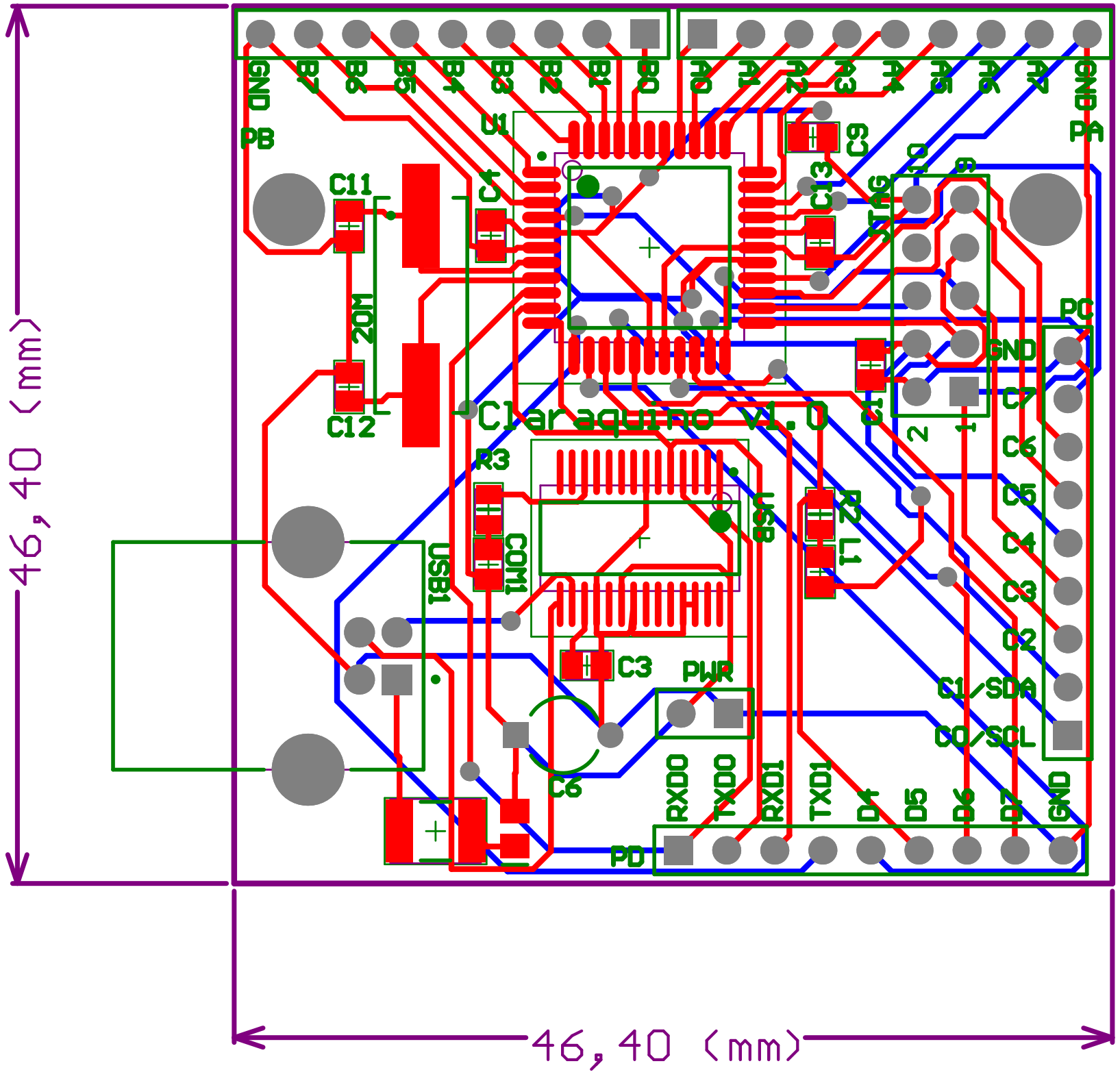

46,40 (mm)
46,40 (mm)
GND
B7
B6
B5
B4
B3
B2
B1
B0
A0
A1
A2
A3
A4
A5
A6
A7
GND
PB
PA
U1
C9
C13
C11
C4
20M
C12
Claraquino v1.0
R3
COM1
USB1
USB
R2
L1
C3
PWR
C6
PC
GND
C7
C6
C5
C4
C3
C2
C1/SDA
C0/SCL
RXD0
TXD0
RXD1
TXD1
D4
D5
D6
D7
GND
PD

Comment	Description	Designator	Footprint	LibRef	Quantity
100nF	Capacitor	C1, C3, C4, C9, C13	CAPC2012L	CAP	5
Cap2	Capacitor	C6	CAPR5-4X5	Cap2	1
18p	Capacitor	C11, C12	CAPC2012L	CAP	2
LED2	Typical RED, GREEN, YELLOW, AMBER GaAs LED	COM1, L1	CAPC2012L	LED2	2
MH2029-300Y	Inductor	IND	0805	Inductor	1
Header 5X2	Header, 5-Pin, Dual row	JTAG	HDR2X5	Header 5X2	1
Fusible	Fuse	MF-MSMF050-2	RESC4532L	Fuse 2	1
Header 9	Header, 9-Pin	PA, PB, PC, PD	HDR1X9	Header 9	4
Header 2	Header, 2-Pin	PWR	HDR1X2	Header 2	1
Res2	Resistor	R2, R3	RESC2012L	Res2	2
ATmega164PA-AU	8-bit AVR Microcontroller 16KB Flash, 512 Bytes EEPROM, 1KB SRAM, 4 pin TQFP, Industrial Grad (-40°C to85°C)	U1	44A_M	ATmega164PA-AU	1
FT232RL-Tube	USB UART Asynchronou Serial Data Transfer Chip SSOP-28, Tube	USB	SSOP-28_M	FT232RL-Tube	1
USB_CONNECTOR_B		USB1	USB2.5-2H4D	USB_CONNECTOR_B	1
20M	Crystal	XTAL1	HC49/4H_SMX	CRYSTAL	1