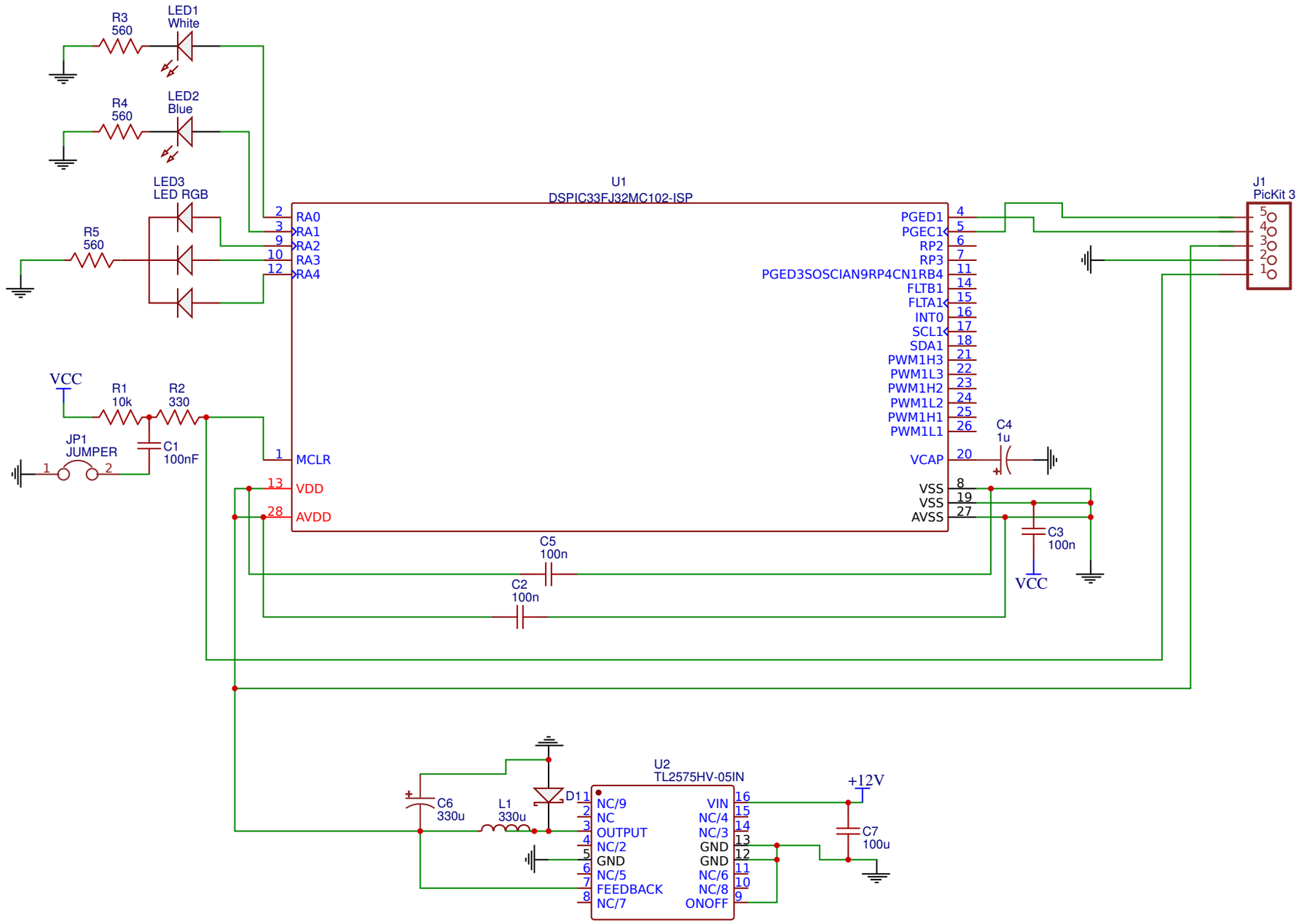

TITLE: KarBot: DSPIC Layout	REV: 1.0
Date: 2017-09-03	Sheet: 1/1
EasyEDA V4.8.5	Drawn By: Edouard