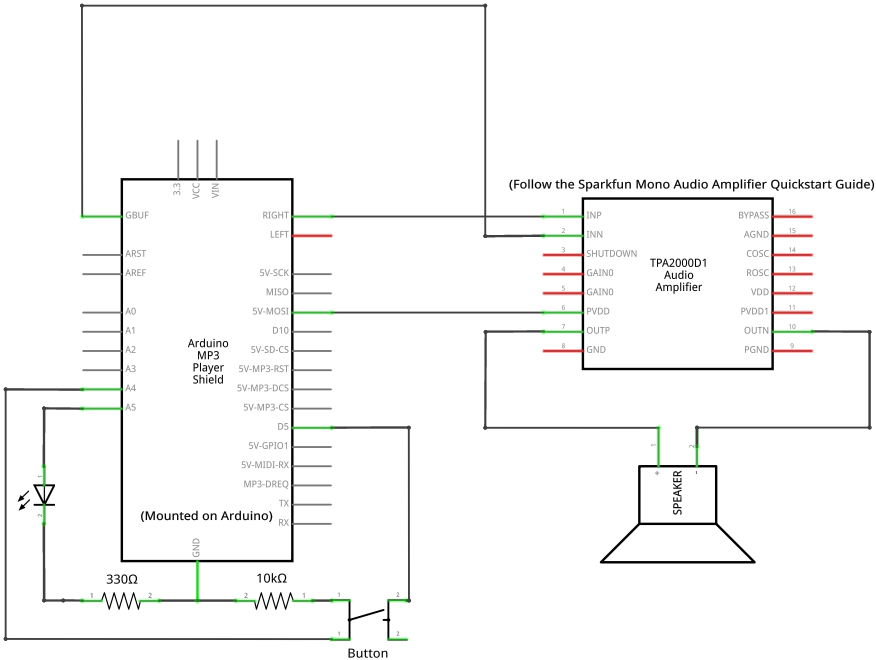
(Follow the Sparkfun Mono Audio Amplifier Quickstart Guide)
3.3
VCC
VIN
GBUF
ARST
AREF
A0
A1
A2
A3
A4
A5
RIGHT
LEFT
5V-SCK
MISO
5V-MOSI
D10
5V-SD-CS
5V-MP3-RST
5V-MP3-DCS
5V-MP3-CS
D5
5V-GPIO1
5V-MIDI-RX
MP3-DREQ
TX
RX
GND
Arduino
MP3
Player
Shield
(Mounted on Arduino)
330Ω
10kΩ
Button
INP
INN
SHUTDOWN
GAIN0
GAIN0
PVDD
OUTP
GND
BYPASS
AGND
COSC
ROSC
VDD
PVDD1
OUTN
PGND
TPA2000D1
Audio
Amplifier
SPEAKER

fritzing