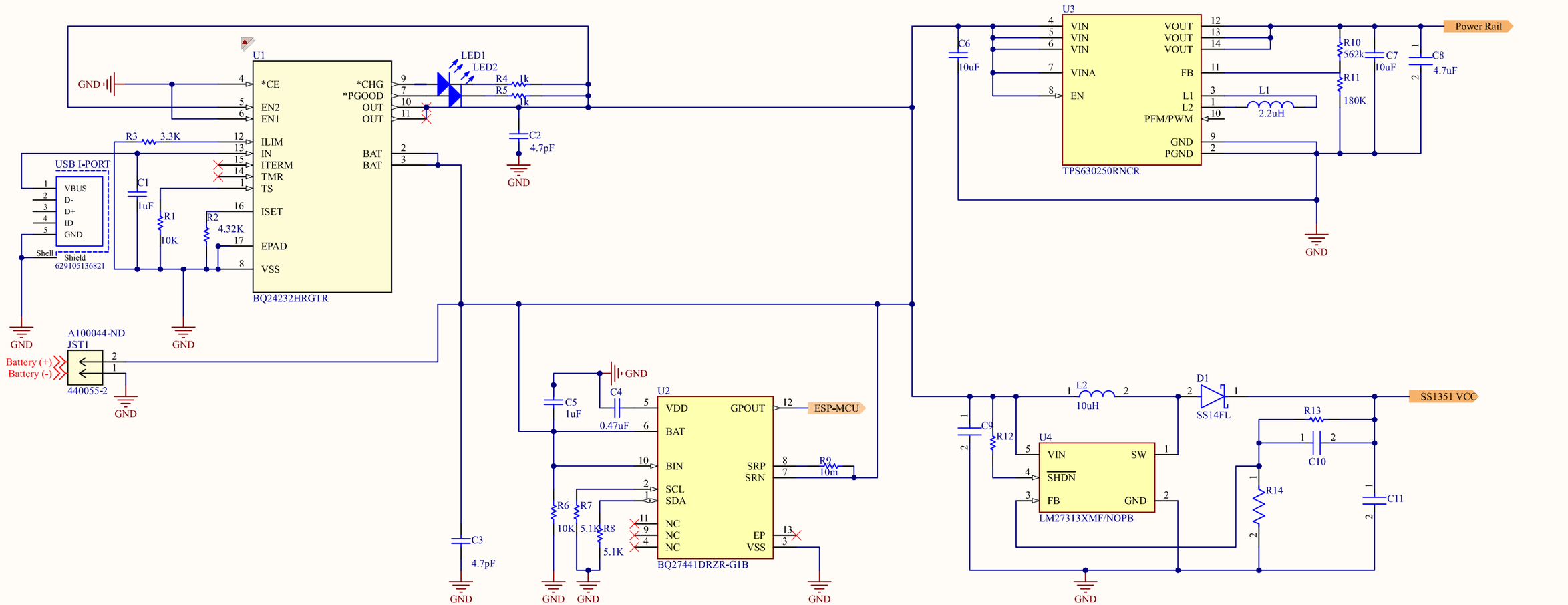

Text

Title		
Battery Power Supply Schematic		
Size: Legal	Number: Kennedy Jackson	Revision: Rev2
Date: 12/04/2021	Sheet of 1	
File: C:\Users\..\Overall Schematic - Updated Comments.SchDoc	Drawn By:	