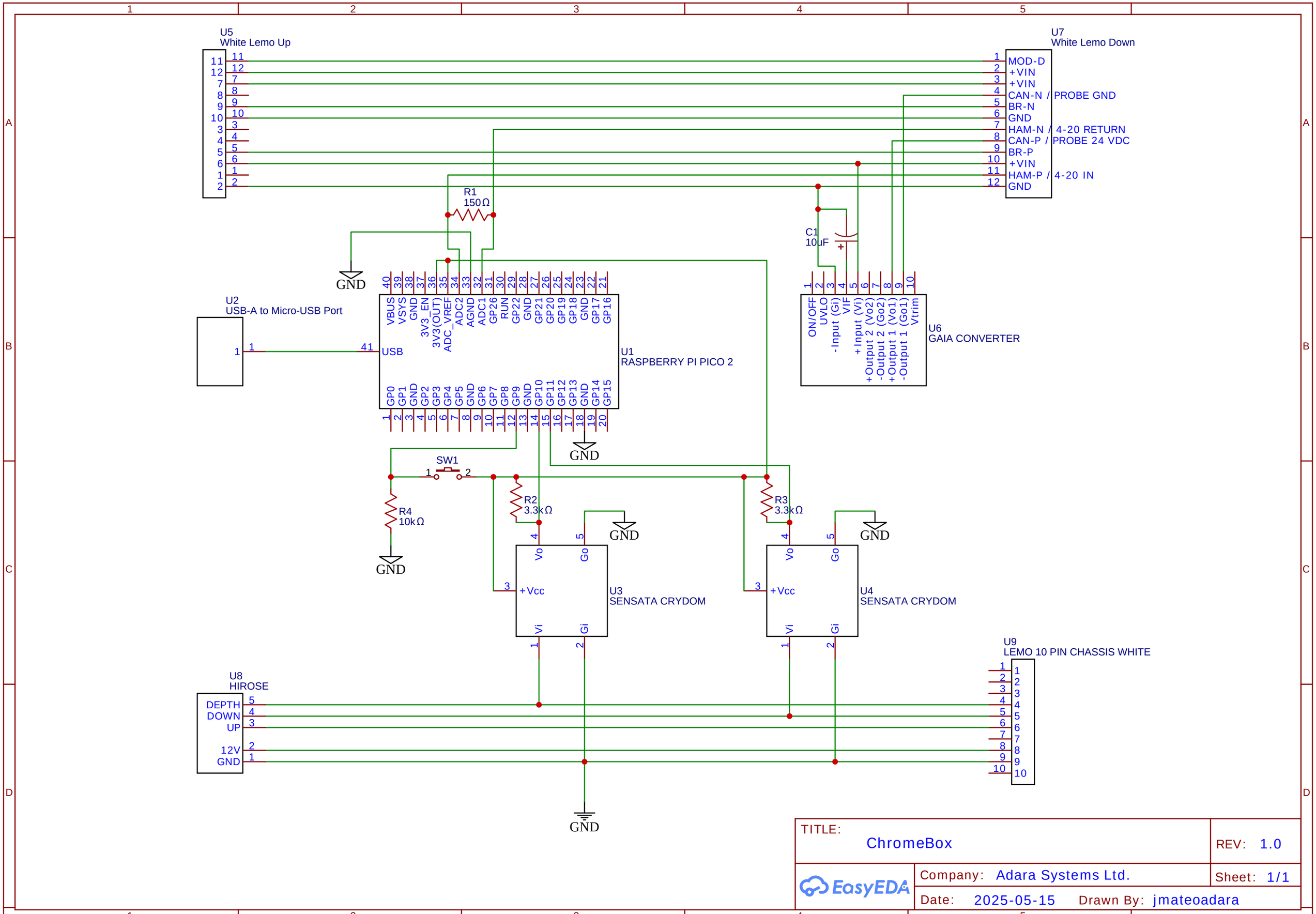
U5
White Lemo Up
U7
White Lemo Down
MOD-D
+VIN
+VIN
CAN-N / PROBE GND
BR-N
GND
HAM-N / 4-20 RETURN
CAN-P / PROBE 24 VDC
BR-P
+VIN
HAM-P / 4-20 IN
GND
R1
150Ω
C1
10uF
GND
U2
USB-A to Micro-USB Port
USB
U1
RASPBERRY PI PICO 2
VBUS
VSYS
GND
3V3_EN
3V3(OUT)
ADC_VREF
ADC2
AGND
ADC1
GP26
RUN
GP22
GND
GP21
GP20
GP19
GP18
GND
GP17
GP16
GP0
GP1
GND
GP2
GP3
GP4
GP5
GND
GP6
GP7
GP8
GP9
GND
GP10
GP11
GP12
GP13
GND
GP14
GP15
U6
GAIA CONVERTER
ON/OFF
UVLO
-Input (Gi)
VIF
+Input (Vi)
+Output 2 (Vo2)
-Output 2 (Go2)
+Output 1 (Vo1)
-Output 1 (Go1)
Vtrim
SW1
R4
10kΩ
R2
3.3kΩ
R3
3.3kΩ
U3
SENSATA CRYDOM
U4
SENSATA CRYDOM
+Vcc
Vo
Go
Vi
Gi
U8
HIROSE
DEPTH
DOWN
UP
12V
GND
U9
LEMO 10 PIN CHASSIS WHITE
TITLE:
ChromeBox
REV: 1.0
Company: Adara Systems Ltd.
Sheet: 1/1
Date: 2025-05-15
Drawn By: jmateoadara
EasyEDA

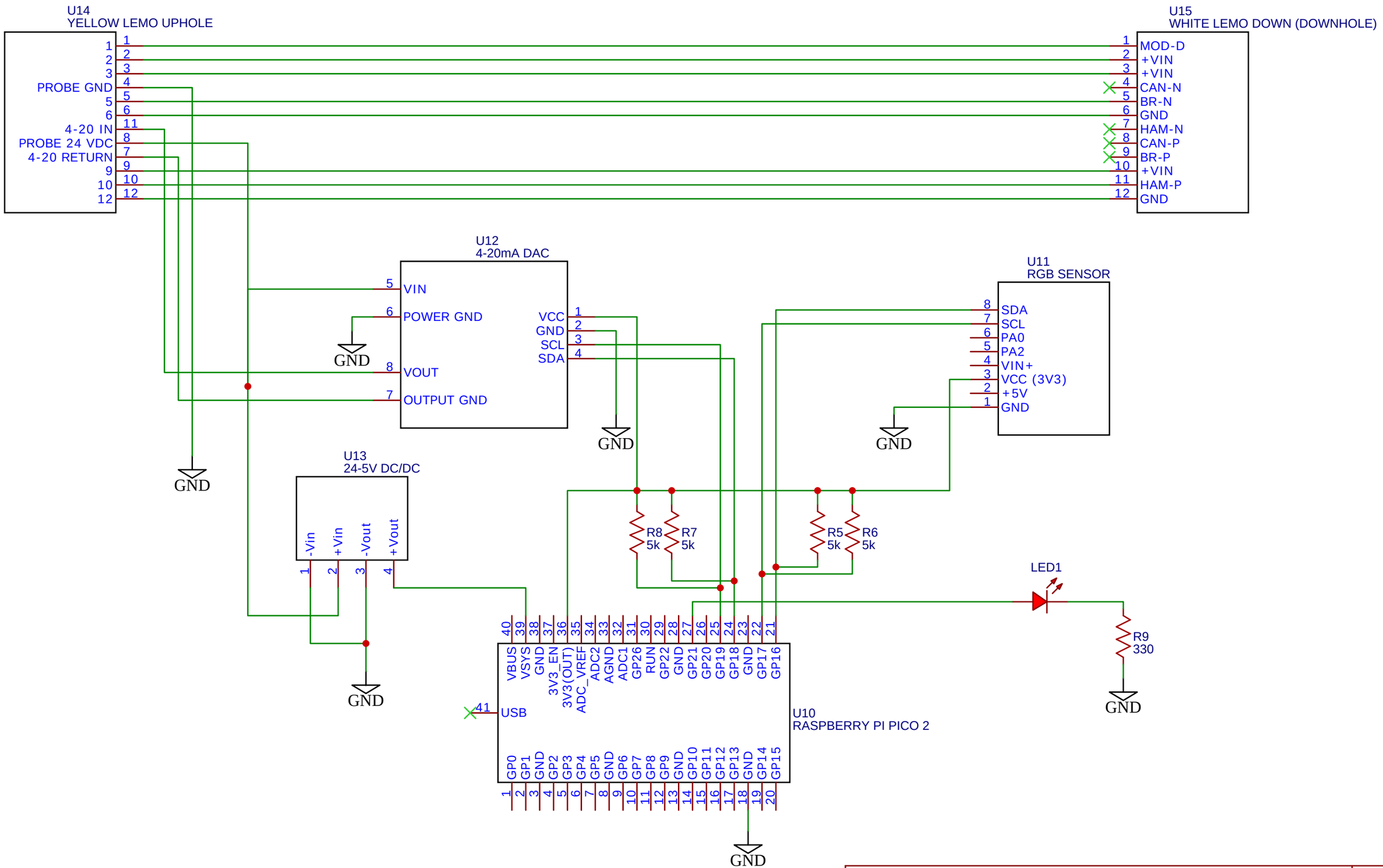

TITLE: ChromeProbe	REV: 1.0
EasyEDA	Company: Adara Systems Ltd. / Sheet: 1/1
	Date: 2025-05-15 Drawn By: jmateoadara