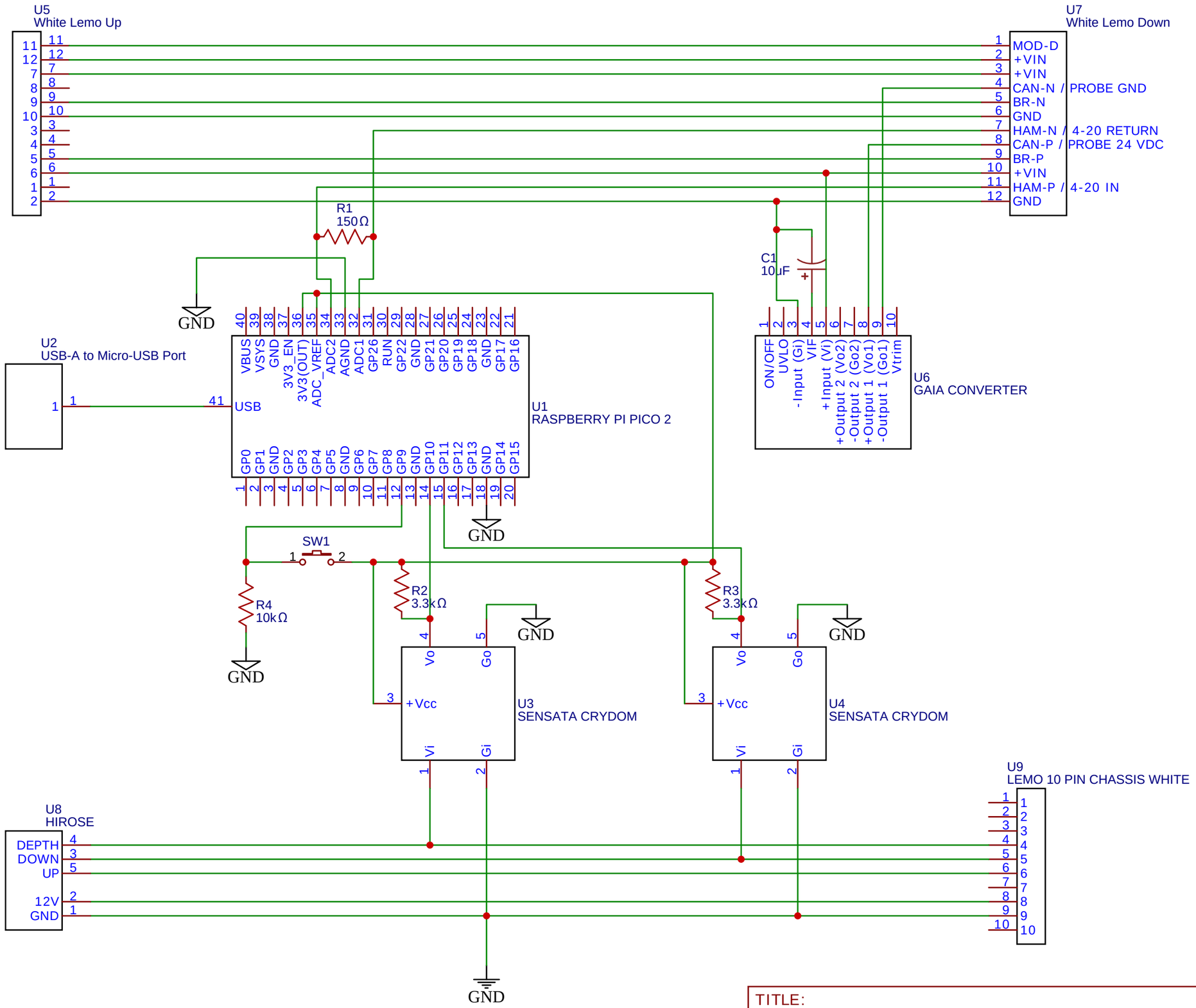

TITLE: ChromeBox	REV: 1.0
EasyEDA	Company: Adara Systems Ltd. / Sheet: 1/1
	Date: 2025-05-15 Drawn By: jmateoadara

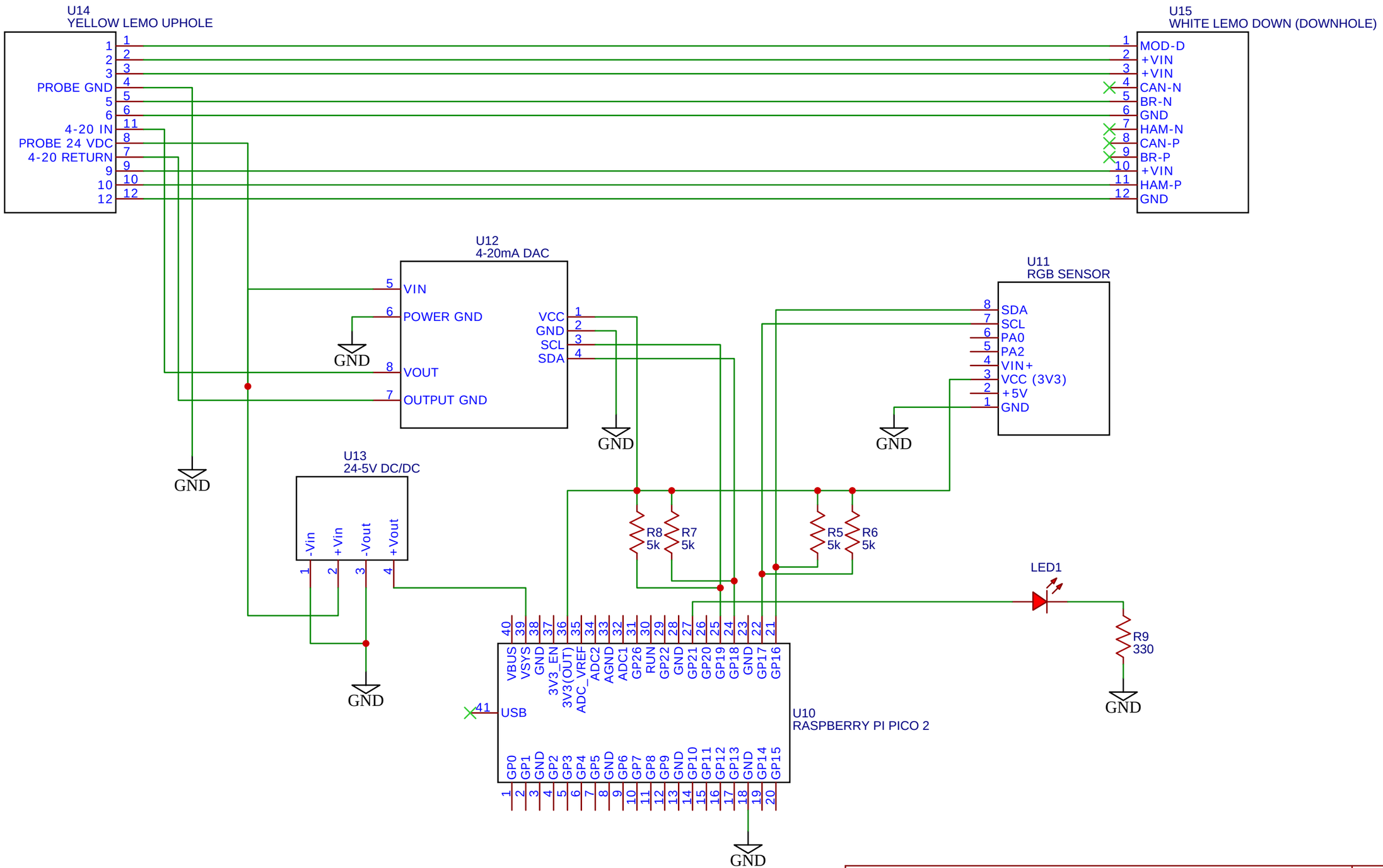

TITLE: ChromeProbe	REV: 1.0
EasyEDA	Company: Adara Systems Ltd. / Sheet: 1/1
	Date: 2025-05-15 Drawn By: jmateoadara