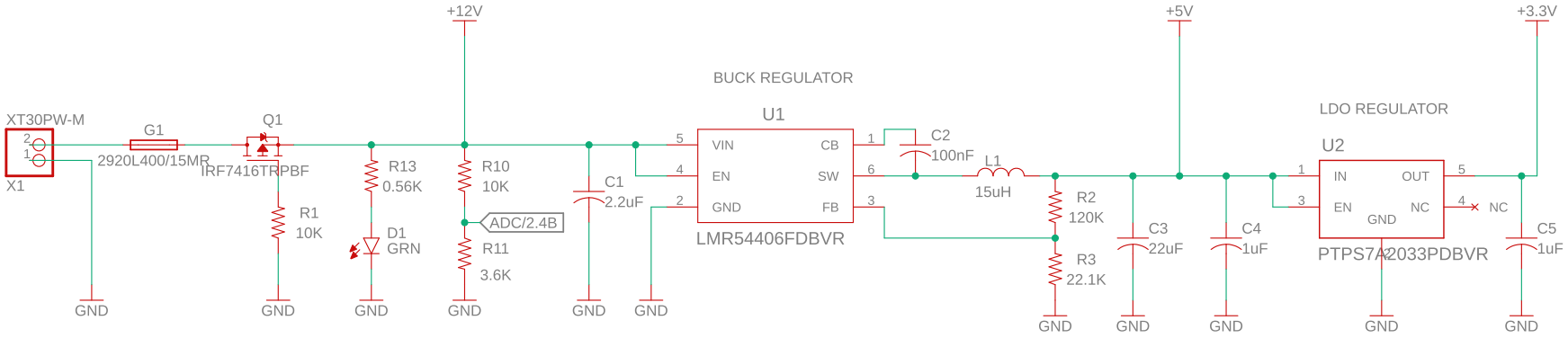

NOTES:

BUCK REGULATOR TEMPERATURE RISE:
P_LOSS = (1/n - 1)*P_OUT
P_LOSS = (1/.93 - 1)*5V*0.6A
P_LOSS = 0.226W
T_RISE = P_LOSS*PSI_JB
T_RISE = 0.226W*30C/W
T_RISE = 6.8C

LDO REGULATOR TEMPERATURE RISE:
P_DROP = (V_IN - V_OUT)*I_OUT
P_DROP = (5V - 3.3V)*0.3A
P_DROP = 0.51W
T_RISE = P_DROP*PSI_JB
T_RISE = 0.51W*54.1C/W
T_RISE = 27.6C

THE +12V RAIL IS ACTUALLY 11.1V (NOMINAL)
THE +5V RAIL IS ACTUALLY ABOUT 5.14V

CAL POLY M.E.

TITLE:	Term Project v25		
Drawn By:	Jack Maxwell	REV:	2
Date:	6/15/2025 11:55 AM	Sheet:	1/2

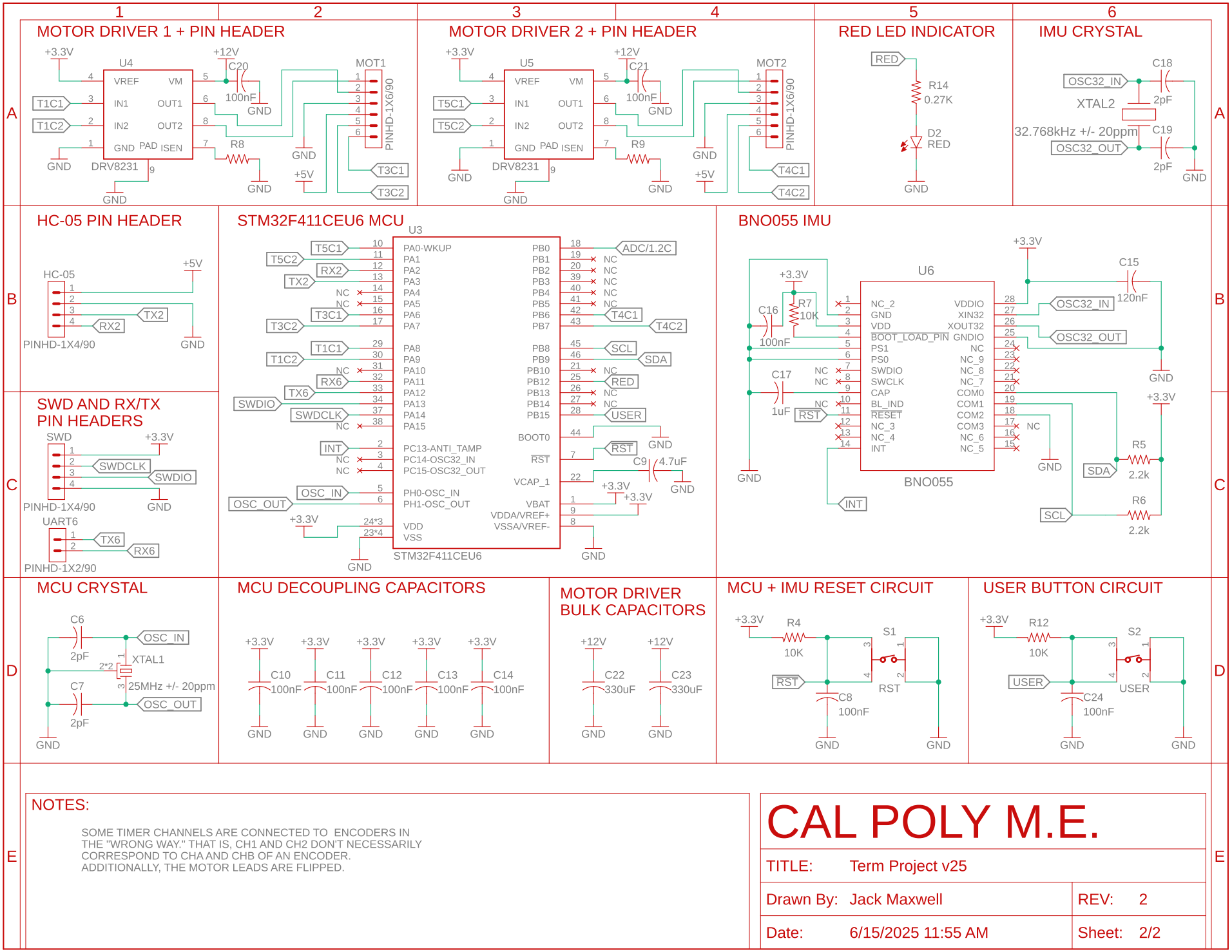
MOTOR DRIVER 1 + PIN HEADER
U4
DRV8231
MOT1
PINHD-1X6/90
MOTOR DRIVER 2 + PIN HEADER
U5
DRV8231
MOT2
PINHD-1X6/90
RED LED INDICATOR
IMU CRYSTAL
XTAL2
32.768kHz +/- 20ppm
HC-05 PIN HEADER
HC-05
PINHD-1X4/90
STM32F411CEU6 MCU
U3
STM32F411CEU6
SWD AND RX/TX PIN HEADERS
SWD
PINHD-1X4/90
UART6
PINHD-1X2/90
BNO055 IMU
U6
BNO055
MCU CRYSTAL
XTAL1
25MHz +/- 20ppm
MCU DECOUPLING CAPACITORS
MOTOR DRIVER BULK CAPACITORS
MCU + IMU RESET CIRCUIT
USER BUTTON CIRCUIT
NOTES:
SOME TIMER CHANNELS ARE CONNECTED TO ENCODERS IN THE "WRONG WAY." THAT IS, CH1 AND CH2 DON'T NECESSARILY CORRESPOND TO CHA AND CHB OF AN ENCODER. ADDITIONALLY, THE MOTOR LEADS ARE FLIPPED.
CAL POLY M.E.
TITLE: Term Project v25
Drawn By: Jack Maxwell
REV: 2
Date: 6/15/2025 11:55 AM
Sheet: 2/2